Declassified and Approved For Release 2012/05/31 : CIA-RDP88-00218R000300030001-0

ESL
A Subsidiary of TRW

TRW

PHASE III
DESIGN REVIEW OF TECHNICAL APPROACH
FBIS MODERNIZATION PROGRAM

30 OCTOBER 1984

CONTRACT NO. 84X-927700-000

495 Java Drive • P.O. Box 3510 • Sunnyvale, CA 94088-3510 • 408.738.2888

COPY NO. 1

Declassified and Approved For Release 2012/05/31 : CIA-RDP88-00218R000300030001-0

Declassified and Approved For Release 2012/05/31 : CIA-RDP88-00218R000300030001-0

PHASE III

DESIGN REVIEW OF TECHNICAL APPROACH

FBIS MODERNIZATION PROGRAM

CONTRACT NO. 84X*927700*000

30 OCTOBER 1984

ESL INCORPORATED
A SUBSIDIARY OF TRW
SUNNYVALE, CALIFORNIA

Declassified and Approved For Release 2012/05/31 : CIA-RDP88-00218R000300030001-0

Declassified and Approved For Release 2012/05/31 : CIA-RDP88-00218R000300030001-0

1. INTRODUCTION AND AGENDA

Declassified and Approved For Release 2012/05/31 : CIA-RDP88-00218R000300030001-0

Declassified and Approved For Release 2012/05/31 : CIA-RDP88-00218R000300030001-0

FBIS–AGENDA FOR FBIS MODERNIZATION
PHASE III DESIGN REVIEW – DAY 1

BRIEFER	TIME	TOPIC
DAHLBERG	9:00	1. INTRODUCTION AND AGENDA
HAAS	9:05	2. FBIS AND ESL
DAHLBERG	9:15	3. PHASE III HIGHLIGHTS
FRISBIE, LEE	9:25	4. BUREAU DESIGN AND OPS CONCEPT - OVERVIEW - COLLECTION SUBSYSTEM
	12:00 1:00	LUNCH - INFORMATION PROCESSING SUBSYSTEM - BUREAU CONFIGURATIONS (HARDWARE SIZING) - DEVELOPMENT AREAS (SOFTWARE SIZING) - DESIGN TRADEOFFS AND VENDOR SELECTION - RISKS - OPEN ISSUES - SUMMARY
KENYON, FORSTER	2:45	5. HEADQUARTERS DESIGN AND OPS CONCEPT - HEADQUARTERS DESIGN
	4:30	END DAY 1

Declassified and Approved For Release 2012/05/31 : CIA-RDP88-00218R000300030001-0

Declassified and Approved For Release 2012/05/31 : CIA-RDP88-00218R000300030001-0

FBIS–AGENDA FOR FBIS MODERNIZATION
PHASE III DESIGN REVIEW – DAY 2

BRIEFER	TIME	TOPIC
KENYON, FORSTER	9:00	5. HEADQUARTERS DESIGN AND OPS CONCEPT (CONTINUED) - DAILY OPERATIONS - TRANSLATION SERVICES - ANALYTICAL SERVICES - DESIGN SUMMARY - OPS CONCEPT - SUMMARY
	12:00	LUNCH
DAHLBERG	1:00	6. PROGRAM COST/SCHEDULE UPDATE - SUMMARY OF WBS CHANGES - BASIS OF ESTIMATES - ANALYSIS OF WBS COST DISTRIBUTION - SCHEDULE - SUMMARY
HAAS	2:00	7. PLANS FOR NEXT PHASE

Declassified and Approved For Release 2012/05/31 : CIA-RDP88-00218R000300030001-0

Declassified and Approved For Release 2012/05/31 : CIA-RDP88-00218R000300030001-0

2. FBIS AND ESL

Declassified and Approved For Release 2012/05/31 : CIA-RDP88-00218R000300030001-0

Declassified and Approved For Release 2012/05/31 : CIA-RDP88-00218R000300030001-0

FBIS—FBIS MODERNIZATION PROGRAM IS IMPORTANT TO ESL

- MAJOR NEW OPPORTUNITY
- OFFERS A FOCUS FOR DATA BASE INTERNAL R&D ON FAST DATA RETRIEVAL PROBLEM
- A LOGICAL WAY FOR STRATEGIC SYSTEMS DIVISION TO EXPAND ITS EXISTING SYSTEMS BUSINESS
- STAFF AND RESOURCES ARE AVAILABLE
- ESL AND HEADQUARTERS HAVE HAD A LONG TERM RELATIONSHIP

Declassified and Approved For Release 2012/05/31 : CIA-RDP88-00218R000300030001-0

Declassified and Approved For Release 2012/05/31 : CIA-RDP88-00218R000300030001-0

FBIS–ESL'S CAPABILITIES MATCH FBIS NEEDS

- ESL'S SIGNAL INTELLIGENCE EXPERIENCE IS DIRECTLY APPLICABLE TO FBIS'S FOREIGN BROADCAST ACQUISITION FACILITIES
- ESL HAS LARGE GOVERNMENT PROGRAM AND ON-SITE OPERATIONS AND MAINTENANCE EXPERIENCE
- ESL TAKES A BALANCED VIEW OF SYSTEM DESIGN AND VENDOR SELECTION
- ESL IS CONCERNED ABOUT USER SUITABLE DESIGN
- ESL HAS COMMITTED RESOURCES TO THE PROGRAM AND WILL CONTINUE TO DO SO
- WE UNDERSTAND THE PROBLEM

Declassified and Approved For Release 2012/05/31 : CIA-RDP88-00218R000300030001-0

Declassified and Approved For Release 2012/05/31 : CIA-RDP88-00218R000300030001-0

3. PHASE III HIGHLIGHTS

Declassified and Approved For Release 2012/05/31 : CIA-RDP88-00218R000300030001-0

Declassified and Approved For Release 2012/05/31 : CIA-RDP88-00218R000300030001-0

- DESIGN AND OPS CONCEPT BRIEFING
  - DISCLOSES AND EXPLAINS DESIGN
  - SPECIFIES VENDORS AND SOFTWARE DEVELOPMENT TASKS
- COST BRIEFING, WBS, AND SCHEDULE
  - COSTS SUPPORTED BY DESIGN INVENTORY OF PURCHASED EQUIPMENT AND DEVELOPED SOFTWARE
  - COSTS ANALYZED FOR BASIS AND DISTRIBUTION
- SPECIFICATION AND OPS CONCEPT
  - FORM FRAMEWORK FOR REWORKED REQUIREMENTS

Declassified and Approved For Release 2012/05/31 : CIA-RDP88-00218R000300030001-0

Declassified and Approved For Release 2012/05/31 : CIA-RDP88-00218R000300030001-0

4. BUREAU DESIGN AND OPS CONCEPT

Declassified and Approved For Release 2012/05/31 : CIA-RDP88-00218R000300030001-0

Declassified and Approved For Release 2012/05/31 : CIA-RDP88-00218R000300030001-0

FBIS–BUREAU BRIEFING INTRODUCTION

- BUREAU OVERVIEW
- COLLECTION SUBSYSTEM

  {EXPANDED ON NEXT VUGRAPH}
- INFORMATION PROCESSING SUBSYSTEM

  {EXPANDED ON NEXT VUGRAPH}
- BUREAU CONFIGURATIONS (HARDWARE SIZING)
  - ASSUMED EQUIPMENT COUNTS
  - HARDWARE COST BASIS
- DEVELOPMENT AREAS (SOFTWARE SIZING)
  - NEW SOFTWARE
  - SOFTWARE MODIFICATIONS
- DESIGN TRADEOFFS SUMMARY
  - ARCHITECTURE TRADEOFFS
  - VENDOR SELECTIONS
- RISKS
  - DEVELOPMENTAL
  - PERFORMANCE/FUNCTIONALITY
- OPEN ISSUES
- SUMMARY

Declassified and Approved For Release 2012/05/31 : CIA-RDP88-00218R000300030001-0

Declassified and Approved For Release 2012/05/31 : CIA-RDP88-00218R000300030001-0

- SUBSYSTEM DESIGN
  - Functional Block Diagram
  - Hardware Block Diagram
  - Hardware Component Descriptions
  - Subsystem Interfaces
  - Software Hierarchy
  - Software Component Descriptions
- DATA PATHS THROUGH ARCHITECTURE
  - Broadcast Collection Operation
  - Cruising Operation
  - Wire Collection Operation
  - Communications Server Operation
- CONCEPT OF OPERATIONS
  - HF Collection & Recording
  - TV Collection & Recording
  - Cruising
  - Broadcast Monitoring
  - Press Agency Wire Monitoring
  - Publications Monitoring
  - Editing Distribution

Declassified and Approved For Release 2012/05/31 : CIA-RDP88-00218R000300030001-0

Declassified and Approved For Release 2012/05/31 : CIA-RDP88-00218R000300030001-0

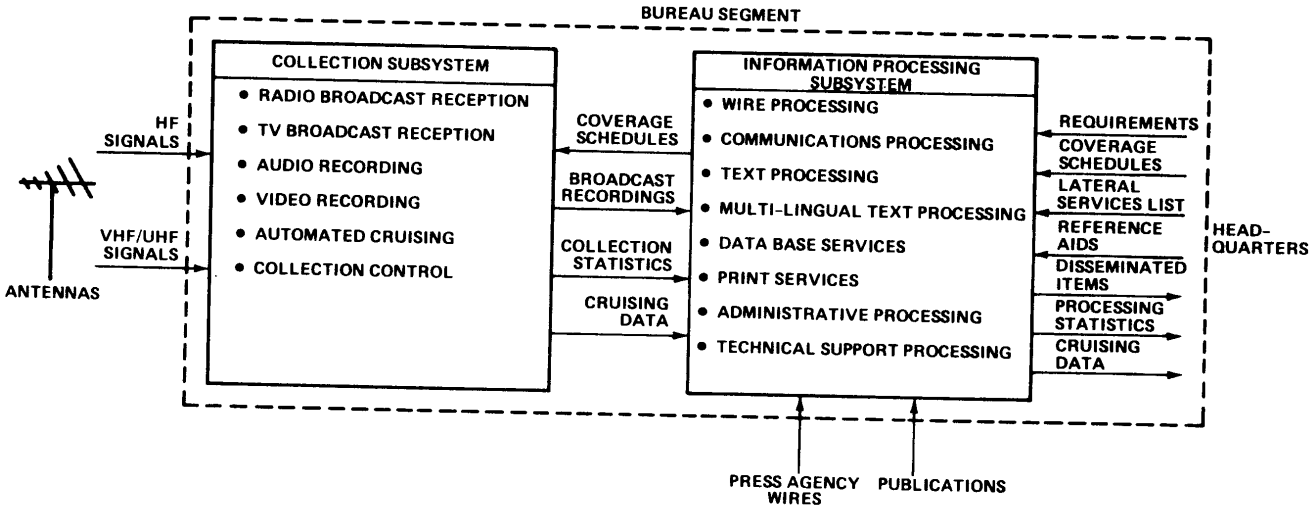

SV00007-6

Declassified and Approved For Release 2012/05/31 : CIA-RDP88-00218R000300030001-0

Declassified and Approved For Release 2012/05/31 : CIA-RDP88-00218R000300030001-0

- PURPOSE
- FUNCTIONAL REQUIREMENTS
  - HF COLLECTION
  - TV COLLECTION
  - AUTOMATED CRUISING
  - RECORDING
  - CONTROL
- HARDWARE IMPLEMENTATION
  - HF COLLECTION
  - TV COLLECTION
  - AUTOMATED CRUISING
  - RECORDING
  - CONTROL
- OPS CONCEPT
  - HF COLLECTION
  - TV COLLECTION
  - AUTOMATED CRUISING
  - RECORDING

Declassified and Approved For Release 2012/05/31 : CIA-RDP88-00218R000300030001-0

Declassified and Approved For Release 2012/05/31 : CIA-RDP88-00218R000300030001-0

- HF COLLECTION AND RECORDING
  - AUTOMATIC ANTENNA SELECTION
  - AUTOMATIC RECEIVER SELECTION
  - AUTOMATIC RECORDING
  - AUTOMATIC LOGGING
- TV COLLECTION AND RECORDING
  - AUTOMATIC ANTENNA SELECTION
  - AUTOMATIC RECEIVER SELECTION
  - AUTOMATIC AUDIO RECORDING
  - AUTOMATIC AUDIO/VISUAL RECORDING
  - AUTOMATIC LOGGING
- AUTOMATED CRUISING
  - SEARCH FOR NEW OR IMPROVED QUALITY OF HF BROADCAST SIGNALS
  - PROCESS, LOG, AND DISPLAY THE RESULTS TO THE CRUISING OPERATOR
  - RECORD AND MONITOR DEMODULATED AUDIO SIGNALS
  - PROVIDE DIRECTED SEARCH OF TV BROADCAST SIGNALS
  - PROCESS, LOG, AND DISPLAY THE RESULTS TO THE CURISING OPERATOR
  - RECORD AND MONITOR TV AUDIO

Declassified and Approved For Release 2012/05/31 : CIA-RDP88-00218R000300030001-0

Declassified and Approved For Release 2012/05/31 : CIA-RDP88-00218R000300030001-0

ESL
A Subsidiary of TRW

FBIS–COLLECTION SUBSYSTEM FUNCTIONAL BLOCK DIAGRAM

TRW

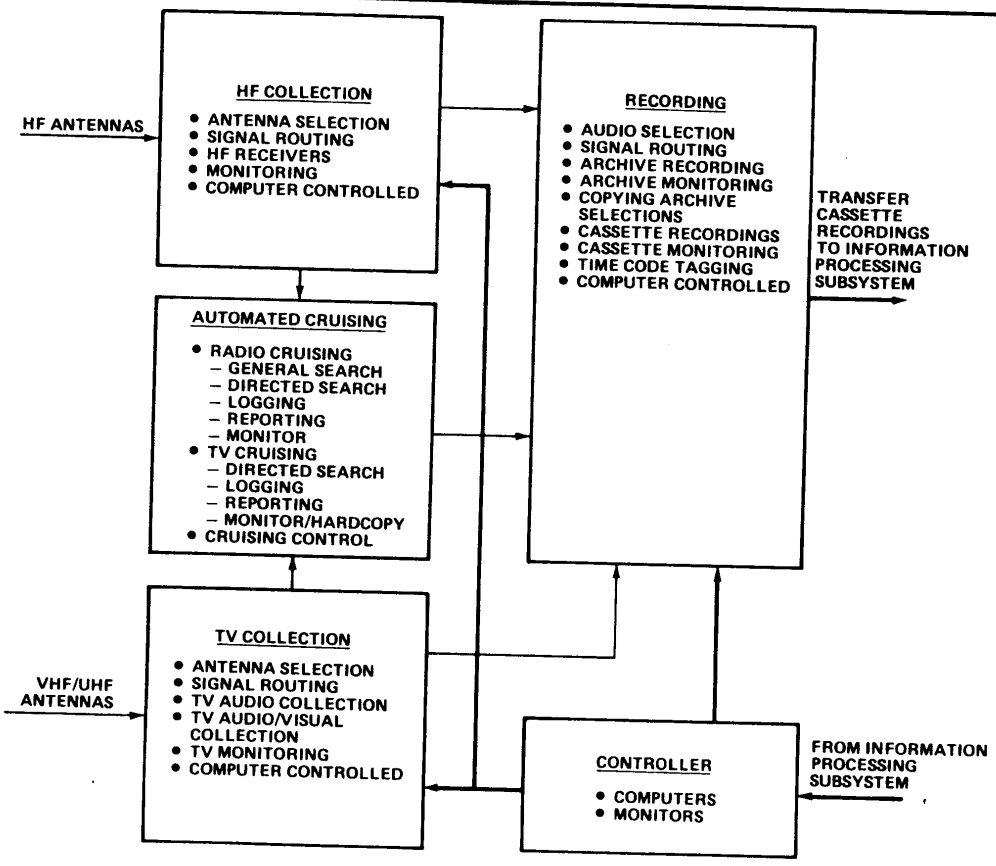

SV00007-4

Declassified and Approved For Release 2012/05/31 : CIA-RDP88-00218R000300030001-0

Declassified and Approved For Release 2012/05/31 : CIA-RDP88-00218R000300030001-0

FBIS–COLLECTION SUBSYSTEM–INTERFACE DIAGRAM

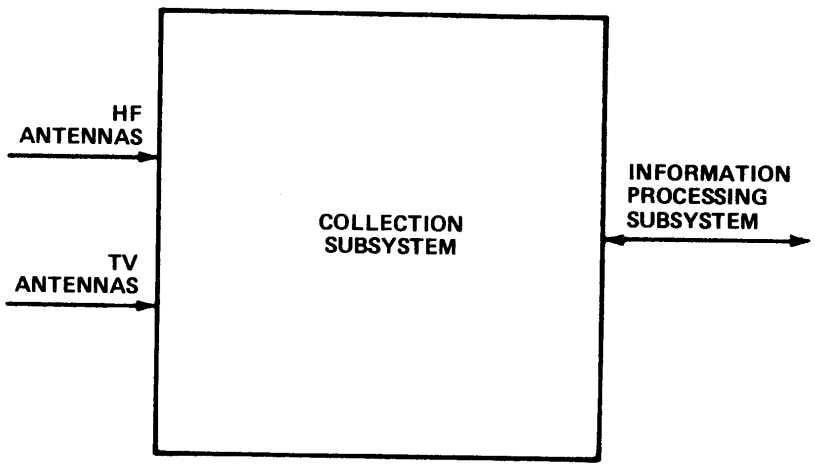

SV00007-5

Declassified and Approved For Release 2012/05/31 : CIA-RDP88-00218R000300030001-0

Declassified and Approved For Release 2012/05/31 : CIA-RDP88-00218R000300030001-0

ESL
A Subsidiary of TRW

FBIS–COLLECTION SUBSYSTEM HARDWARE BLOCK DIAGRAM

TRW

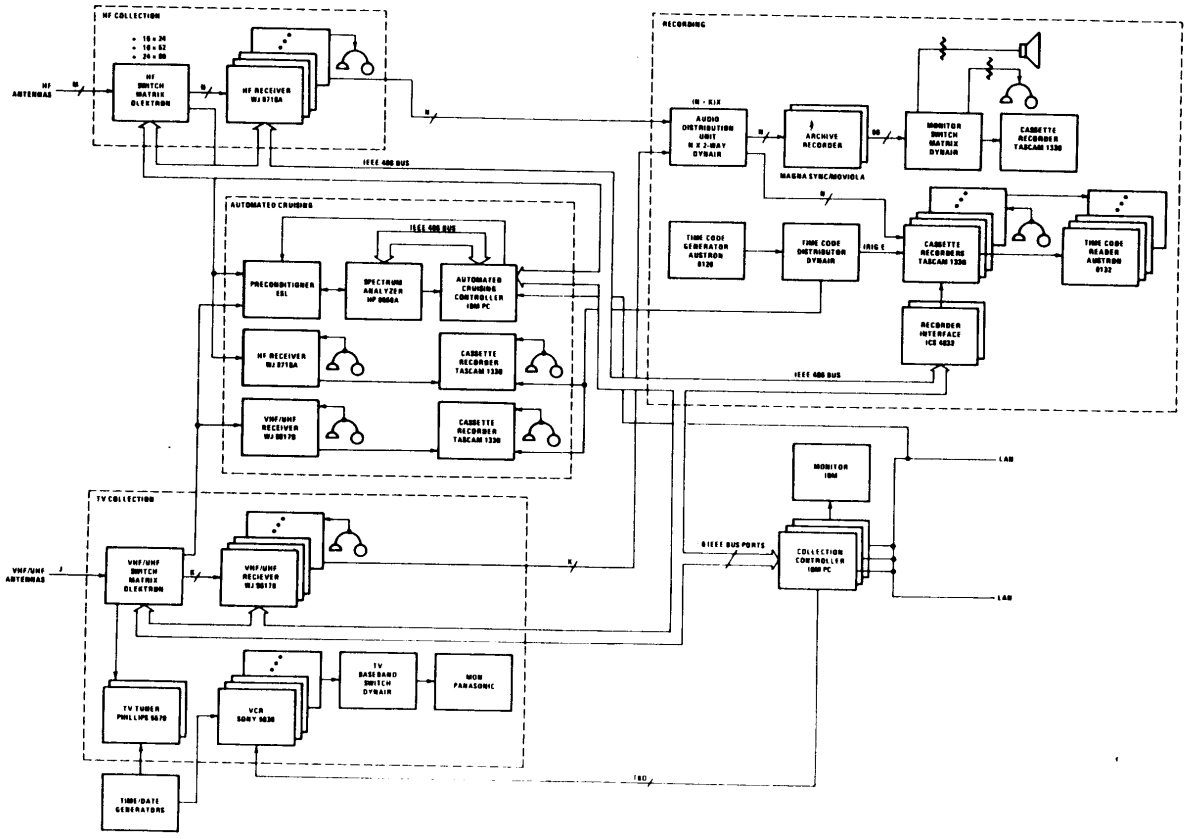

Declassified and Approved For Release 2012/05/31 : CIA-RDP88-00218R000300030001-0

Declassified and Approved For Release 2012/05/31 : CIA-RDP88-00218R000300030001-0

FBIS–COLLECTION SUBSYSTEM–HARDWARE FEATURES

- FLEXIBLE (ADAPTABLE TO EACH BUREAU)
  - HARDWARE SIZED FOR BUREAU REQUIREMENTS
  - LOCATION OF HARDWARE CUSTOMIZED FOR EACH BUREAU
- MAINTAINABLE
  - INDUSTRIAL QUALITY UNITS
  - UNIT DIAGNOSTICS FOR FAULT ISOLATION
- KEY FUNCTIONS ARE AUTOMATED
- REMOTELY CONTROLLED UNITS HAVE MANUAL OVERIDES

Declassified and Approved For Release 2012/05/31 : CIA-RDP88-00218R000300030001-0

Declassified and Approved For Release 2012/05/31 : CIA-RDP88-00218R000300030001-0

- H. F. SWITCH MATRIX
- HF RECEIVER
- HEADSETS

Declassified and Approved For Release 2012/05/31 : CIA-RDP88-00218R000300030001-0

Declassified and Approved For Release 2012/05/31 : CIA-RDP88-00218R000300030001-0

FBIS–COLLECTION EQUIPMENT– HF SWITCH MATRIX REQUIREMENTS

- FREQUENCY RANGE: 100KHZ TO 30MHZ
- THREE SWITCH MATRIX SIZES TO ACCOMODATE ALL BUREAUS
  - 24 INPUTS X 80 OUTPUTS
  - 16 INPUTS X 56 OUTPUTS
  - 16 INPUTS X 24 OUTPUTS
- CONTROLLED REMOTELY VIA AN IEEE 488 BUS OR MANUALLY VIA FRONT PANEL CONTROLS
- MUST HAVE DIAGNOSTIC CAPABILITY
- LOCAL/REMOTE CONTROL ON FRONT PANEL
- MANUAL PATCH BYPASS

Declassified and Approved For Release 2012/05/31 : CIA-RDP88-00218R000300030001-0

Declassified and Approved For Release 2012/05/31 : CIA-RDP88-00218R000300030001-0

ESL
A Subsidiary of TRW

FBIS–HF SWITCH MATRIX BLOCK DIAGRAM

TRW

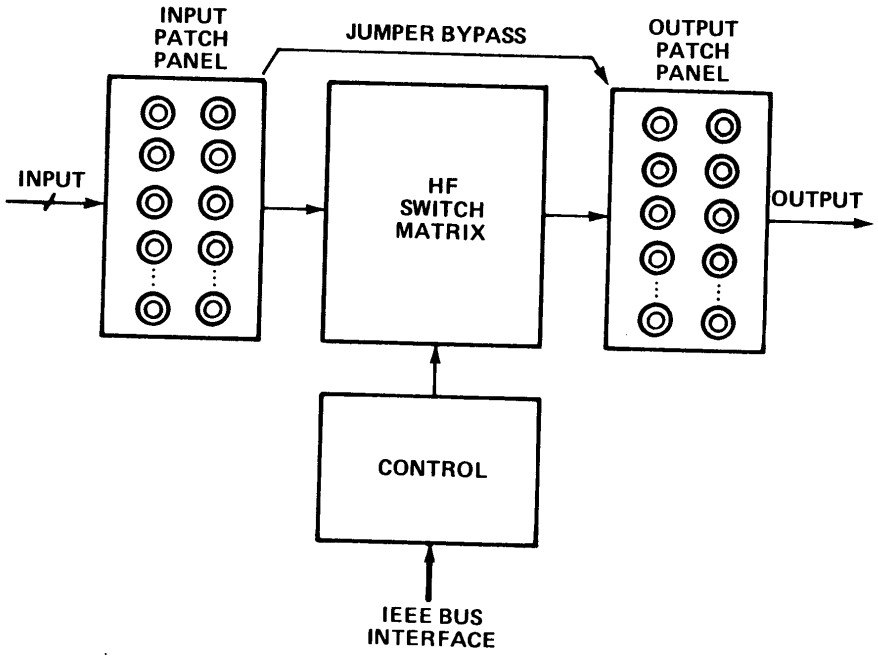

SV00007-1

Declassified and Approved For Release 2012/05/31 : CIA-RDP88-00218R000300030001-0

Declassified and Approved For Release 2012/05/31 : CIA-RDP88-00218R000300030001-0

- RECOMMENDED VENDOR: OLEKTRON (SUBCONTRACT)
- HAS BUILT SWITCH MATRICES THAT MEET THE REQUIREMENT
- CAN BE CONTROLLED VIA A FRONT PANEL KEYPAD OR REMOTELY VIA AN IEE 488 BUS
- HAS DIAGNOSTIC CAPABILITY IN ORDER TO FAULT ISOLATE DOWN TO BAORD LEVEL
- MANUAL PATCH BYPASS

Declassified and Approved For Release 2012/05/31 : CIA-RDP88-00218R000300030001-0

Declassified and Approved For Release 2012/05/31 : CIA-RDP88-00218R000300030001-0

- FREQUENCY RANGE: 100KHZ TO 30MHZ
- 8KHZ IF BANDWIDTH
- AM DETECTION
- LOCAL/REMOTE FRONT PANEL CONTROL
- IEEE 488 BUS INTERFACE
- DIAGNOSTICS

Declassified and Approved For Release 2012/05/31 : CIA-RDP88-00218R000300030001-0

Declassified and Approved For Release 2012/05/31 : CIA-RDP88-00218R000300030001-0

- WJ 8718A
  - FREQUENCY RANGE: 5KHZ TO 30 MHZ IN 1 BAND
  - IF BANDWIDTHS: 16KHZ, 8KHZ
  - IEEE 488 BUS INTERFACE
  - BITE (DIAGNOSTICS)

- WJ9040 SYSTEM (USING WJ 8626-4 RECEIVERS)
  - SAME PERFORMANCE FEATURES AS WJ8718A
  - RECEIVER REQUIRES ONLY 1/2 MOUNT

Declassified and Approved For Release 2012/05/31 : CIA-RDP88-00218R000300030001-0

Declassified and Approved For Release 2012/05/31 : CIA-RDP88-00218R000300030001-0

- VHF/UHF SWITCH MATRIX
- VHF/UHF RECEIVER
- UHF/VHF TV TUNER
- TIME/DATE GENERATOR
- VIDEO CASSETTE RECORDER
- TV BASEBAND SELECTOR SWITCH
- VIDEO MONITOR
- HEADSETS

Declassified and Approved For Release 2012/05/31 : CIA-RDP88-00218R000300030001-0

Declassified and Approved For Release 2012/05/31 : CIA-RDP88-00218R000300030001-0

FBIS–TV COLLECTION EQUIPMENT–VHF/UHF SWITCH MATRIX

- FREQUENCY RANGE: 40 MHZ TO 1000 MHZ
- 12 INPUTS X 12 OUTPUTS
- CONTROLLED REMOTELY VIA AN IEEE 488 BUS OR MANUALLY VIA FRONT PANEL CONTROLS
- MUST HAVE DIAGNOSTIC CAPABILITY
- LOCAL/REMOTE CONTROL ON FRONT PANEL
- MANUAL PATCH BYPASS

Declassified and Approved For Release 2012/05/31 : CIA-RDP88-00218R000300030001-0

Declassified and Approved For Release 2012/05/31 : CIA-RDP88-00218R000300030001-0

- RECOMMENDED VENDOR: OLEKTRON (SUBCONTRACT)
- HAS BUILT SWITCH MATRICES THAT MEET THE REQUIREMENT
- CAN BE CONTROLLED VIA A FRONT PANEL KEYPAD OR REMOTELY VIA AN IEE 488 BUS
- HAS DIAGNOSTIC CAPABILITY IN ORDER TO FAULT ISOLATE DOWN TO BOARD LEVEL
- MANUAL PATCH BYPASS

Declassified and Approved For Release 2012/05/31 : CIA-RDP88-00218R000300030001-0

Declassified and Approved For Release 2012/05/31 : CIA-RDP88-00218R000300030001-0

- FREQUENCY RANGE: 40 MHZ TO 1000 MHZ
- IF BANDWIDTH: 10KHZ, 50KHZ, 100KHZ,
- AM/FM DETECTION
- LOCAL/REMOTE FRONT PANEL CONTROL
- IEEE 488 BUS INTERFACE
- DIAGNOSTICS

Declassified and Approved For Release 2012/05/31 : CIA-RDP88-00218R000300030001-0

Declassified and Approved For Release 2012/05/31 : CIA-RDP88-00218R000300030001-0

- WJ 8617B
  - FREQUENCY RANGE: 20MHZ TO 1100MHZ
  - IF BANDWIDTH: 10KHZ, 50KHZ, 100KHZ
  - IEEE 488 BUS INTERFACE
  - BITE (DIAGNOSTICS)

- WJ 9040 SYSTEM (USING WJ 8628-4 RECEIVER-FALL 1984)
  - SAME PERFORMANCE FEATURES AS WJ 8617B
  - RECEIVER REQUIRES ONLY 1/2 RACK MOUNT

Declassified and Approved For Release 2012/05/31 : CIA-RDP88-00218R000300030001-0

Declassified and Approved For Release 2012/05/31 : CIA-RDP88-00218R000300030001-0

- ACCEPT ALL VHF/UHF CHANNELS
- CONVERT SELECTED CHANNEL TO TV BASEBAND
- MANUAL OR REMOTELY CONTROLLABLE
- ACCEPTS TIME/DATE GENERATOR INPUT

- RECOMMENDED MANUFACTURER: PHILLIPS
- PART NUMBER: PM 5560

Declassified and Approved For Release 2012/05/31 : CIA-RDP88-00218R000300030001-0

Declassified and Approved For Release 2012/05/31 : CIA-RDP88-00218R000300030001-0

- PROVIDE TIME AND DATE INFORMATION TO THE TV TUNER
- PROVIDE INFORMATION IN ALL THREE TV FORMATS
- RECOMMENDED MANUFACTURER: PANASONIC
- PART NUMBER: WJ 810 SERIES

Declassified and Approved For Release 2012/05/31 : CIA-RDP88-00218R000300030001-0

Declassified and Approved For Release 2012/05/31 : CIA-RDP88-00218R000300030001-0

FBIS–TV COLLECTION EQUIPMENT –VCR REQUIREMENTS

- REMOTELY CONTROLLABLE
  - CHANNEL SELECTION
  - RECORD ON/OFF
- RECORD AND PLAYBACK IN THREE FORMATS
  - NTSC
  - PAL
  - SECAM
- TIME/DATE ANNOTATION
- END OF TAPE SENSING FOR AUTOMATIC SEQUENCING

Declassified and Approved For Release 2012/05/31 : CIA-RDP88-00218R000300030001-0

Declassified and Approved For Release 2012/05/31 : CIA-RDP88-00218R000300030001-0

- RECOMMENDED SUPPLIER SONY
- MODEL NUMBER: 5630
- 3/4 INCH TAPE MODEL
- 2 HOUR RECORDING
- RECORD AND PLAYBACK AT BASEBAND
- AUTOMATIC POWER AND FREQUENCY SENSING
- END OF TAPE SENSING FOR AUTOMATIC SEQUENCING
- REMOTELY CONTROLLED
- INDUSTRIAL

Declassified and Approved For Release 2012/05/31 : CIA-RDP88-00218R000300030001-0

Declassified and Approved For Release 2012/05/31 : CIA-RDP88-00218R000300030001-0

ESL
A Subsidiary of TRW

FBIS–TV COLLECTION EQUIPMENT–SONY 5630 VCR

TRW

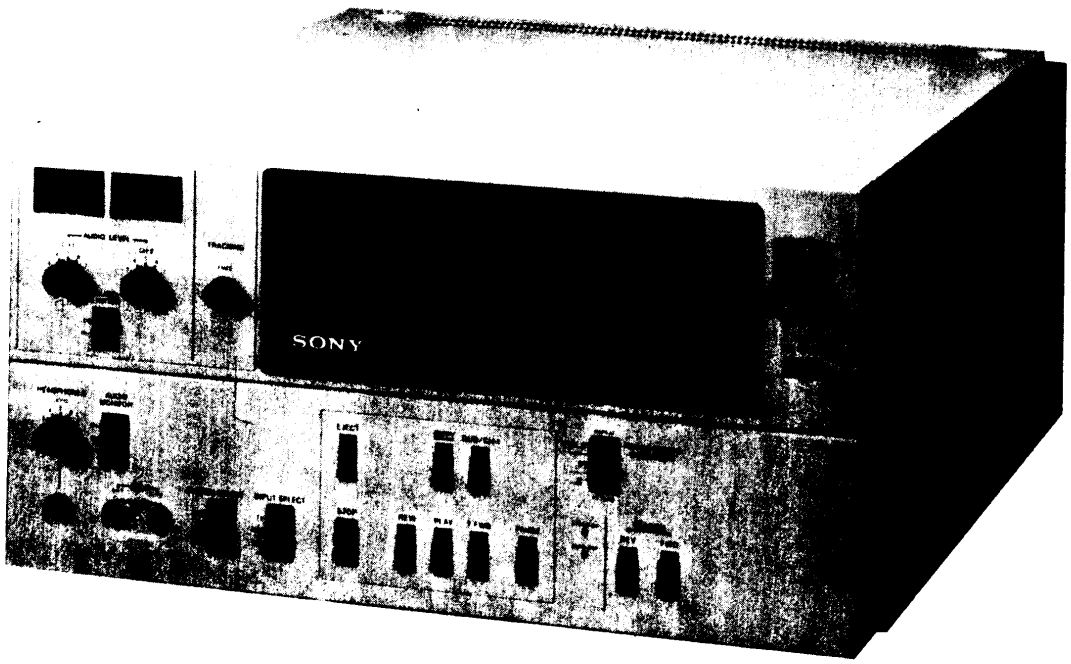

SV00007-14

Declassified and Approved For Release 2012/05/31 : CIA-RDP88-00218R000300030001-0

Declassified and Approved For Release 2012/05/31 : CIA-RDP88-00218R000300030001-0

- 12 INPUT BY 1 OUTPUT MATRIX
- FREQUENCY RANGE: 20HZ TO 8MHZ
- MANUALLY CONTROLLED
- RECOMMENDED VENDOR: DYNAIR
- MODEL NUMBER: SERIES 1600
- 16 x 1 SWITCH MATRIX

Declassified and Approved For Release 2012/05/31 : CIA-RDP88-00218R000300030001-0

Declassified and Approved For Release 2012/05/31 : CIA-RDP88-00218R000300030001-0

- COLOR
- ACCEPTS ALL THREE FORMATS
- RECOMMENDED MANUFACTURER: PANASONIC
- MODEL NUMBER CT2000M

Declassified and Approved For Release 2012/05/31 : CIA-RDP88-00218R000300030001-0

Declassified and Approved For Release 2012/05/31 : CIA-RDP88-00218R000300030001-0

- PRECONDITIONER
- SPECTRUM ANALYZER
- CONTROLLER
- H. F. RECEIVER
- VHF/UHF RECEIVER
- CASSETTE RECORDER
- HEADSETS

Declassified and Approved For Release 2012/05/31 : CIA-RDP88-00218R000300030001-0

Declassified and Approved For Release 2012/05/31 : CIA-RDP88-00218R000300030001-0

- FREQUENCY RANGE: 100KHZ TO 1000MHZ
- BROADCAST BANDPASS FILTERS
  - LOWBAND FILTER
  - MEDIUM BAND FILTER
  - SHORT WAVE FILTER
- TV FILTERS
  - VHF FILTER
  - UHF FILTER
- FILTERS REMOTELY SELECTABLE

- CUSTOM UNIT REQUIRED

Declassified and Approved For Release 2012/05/31 : CIA-RDP88-00218R000300030001-0

Declassified and Approved For Release 2012/05/31 : CIA-RDP88-00218R000300030001-0

FBIS–PRECONDITIONER BLOCK DIAGRAM

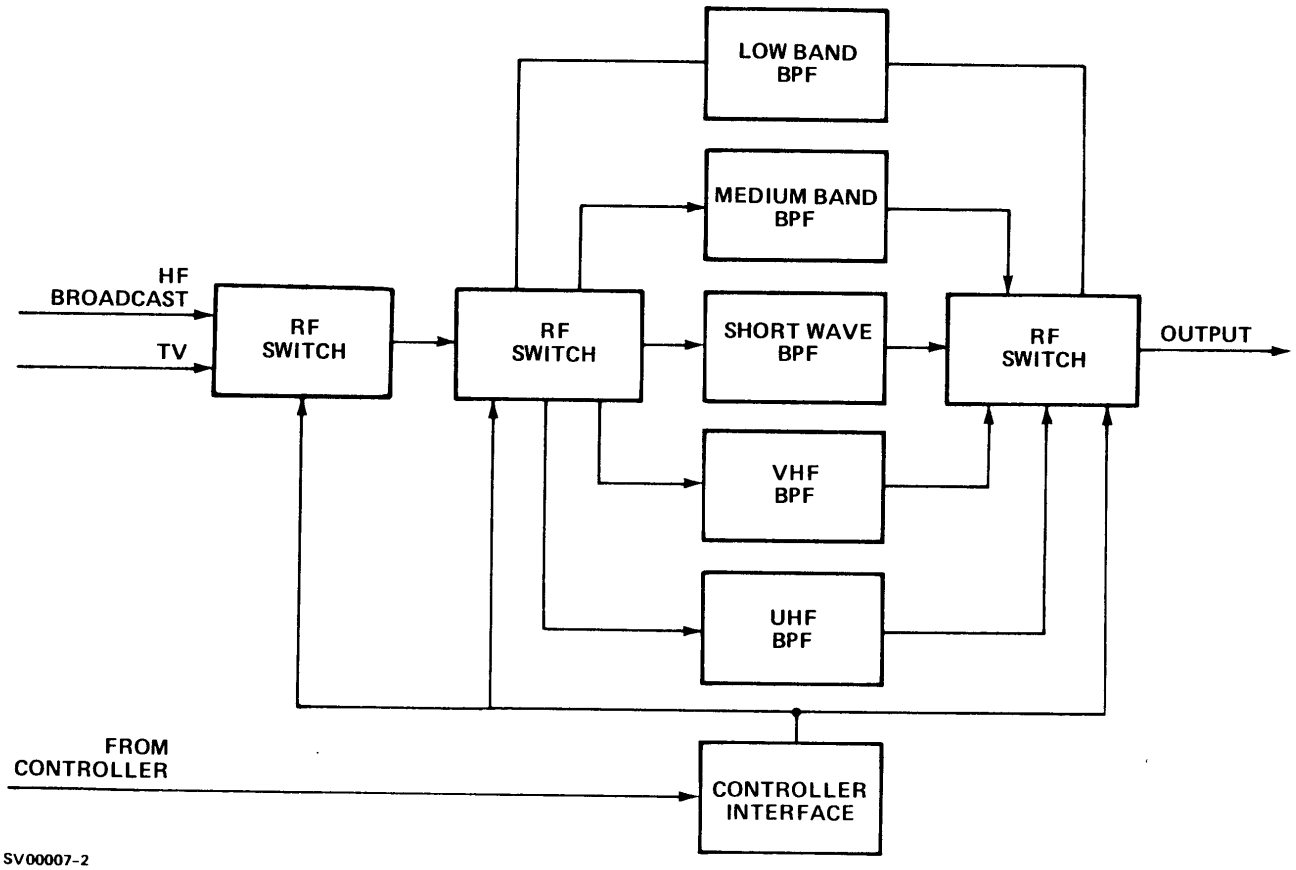

Declassified and Approved For Release 2012/05/31 : CIA-RDP88-00218R000300030001-0

Declassified and Approved For Release 2012/05/31 : CIA-RDP88-00218R000300030001-0

- FREQUENCY RANGE: 100KHZ TO 1000MHZ
- IEEE 488 BUS CONTROLLED
- SELECTABLE:
  - RESOLUTION BANDWIDTH
  - START/STOP FREQUENCY
  - REFERENCE LEVEL
- OUTPUT DISPLAY DATA (1024 POINTS)
- RECOMMENDED MANUFACTURER: HEWLETT PACKARD
- MODEL NUMBER: HP 8568A

Declassified and Approved For Release 2012/05/31 : CIA-RDP88-00218R000300030001-0

Declassified and Approved For Release 2012/05/31 : CIA-RDP88-00218R000300030001-0

ESL
A Subsidiary of TRW

FBIS–AUTOMATED CRUISING EQUIPMENT– SPECTRUM ANALYZER FRONT PANEL

TRW

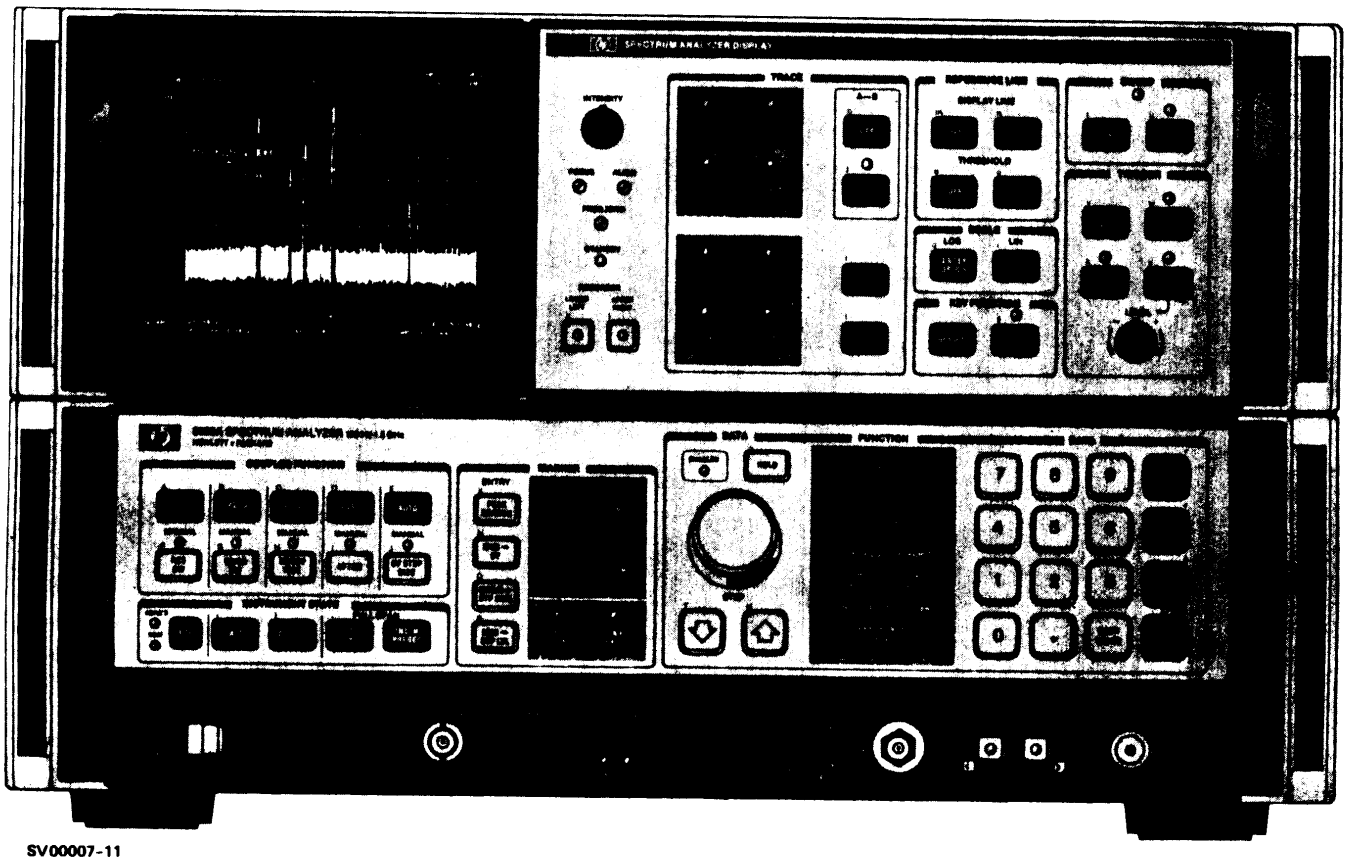

SV00007-11

Declassified and Approved For Release 2012/05/31 : CIA-RDP88-00218R000300030001-0

Declassified and Approved For Release 2012/05/31 : CIA-RDP88-00218R000300030001-0

ESL
A Subsidiary of TRW

FBIS–AUTOMATED CRUISING EQUIPMENT–SPECTRUM ANALYZER DISPLAY

TRW

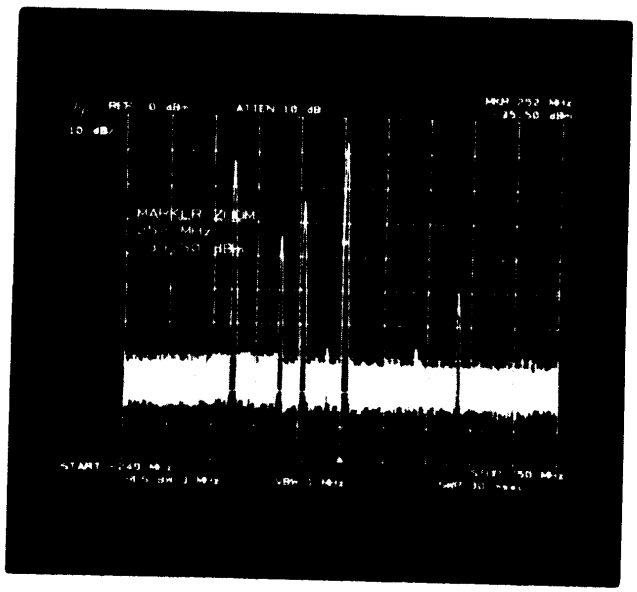

SV00007-13

Declassified and Approved For Release 2012/05/31 : CIA-RDP88-00218R000300030001-0

Declassified and Approved For Release 2012/05/31 : CIA-RDP88-00218R000300030001-0

- CRT DISPLAY
- IEEE 488 (HPIB) BUS INTERFACE
- 2 MB OF MEMORY STORAGE

Declassified and Approved For Release 2012/05/31 : CIA-RDP88-00218R000300030001-0

Declassified and Approved For Release 2012/05/31 : CIA-RDP88-00218R000300030001-0

- COMPUTER-RECOMMENDED MANUFACTURER: IBM

- MODEL NUMBER: PC-AT MODEL 99

Declassified and Approved For Release 2012/05/31 : CIA-RDP88-00218R000300030001-0

Declassified and Approved For Release 2012/05/31 : CIA-RDP88-00218R000300030001-0

- HF RECEIVER: SAME AS FOR HF COLLECTION

- VHF/UHF RECEIVER: SAME AS FOR TV COLLECTION

Declassified and Approved For Release 2012/05/31 : CIA-RDP88-00218R000300030001-0

Declassified and Approved For Release 2012/05/31 : CIA-RDP88-00218R000300030001-0

- SINGLE CHANNEL AUDIO RECORDING
- FREQUENCY RESPONSE: 50HZ TO 8 KHZ
- ACCEPT IRIG E TIME CODE
- INDUSTRIAL QUALITY

- RECOMMENDED MANUFACTURER: TASCAM
- MODEL NUMBER: 133B

Declassified and Approved For Release 2012/05/31 : CIA-RDP88-00218R000300030001-0

Declassified and Approved For Release 2012/05/31 : CIA-RDP88-00218R000300030001-0

ESL
A Subsidiary of TRW

FBIS–AUTOMATED CRUISING EQUIPMENT–TASCAM 133B RECORDER

TRW

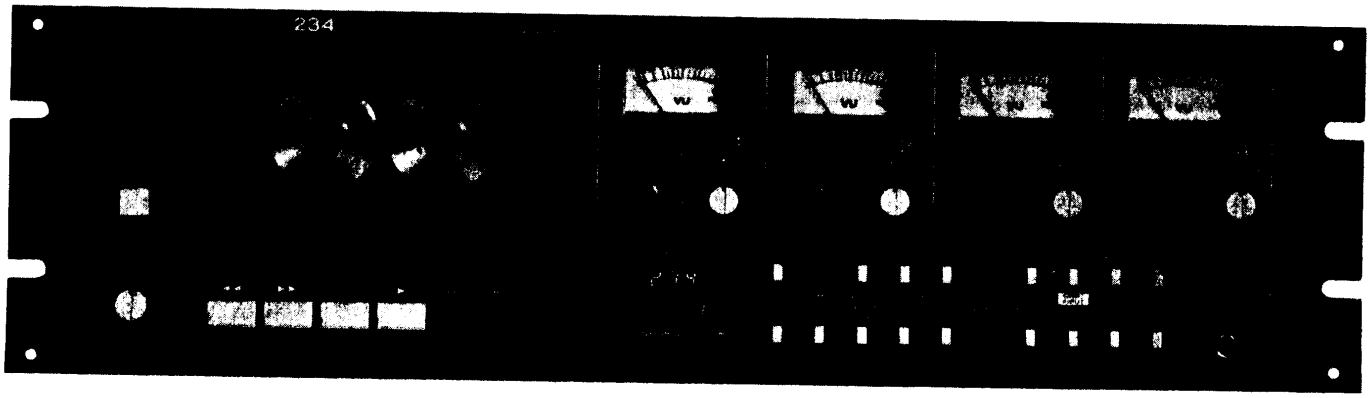

SV00007-10

Declassified and Approved For Release 2012/05/31 : CIA-RDP88-00218R000300030001-0

Declassified and Approved For Release 2012/05/31 : CIA-RDP88-00218R000300030001-0

- AUDIO DISTRIBUTION UNIT
- ARCHIVE RECORDER
- CASSETTE RECORDER
- RECORDER INTERFACE
- MONITOR SWITCH
- TIME CODE GENERATOR
- TIME CODE DISTRIBUTION
- HEADSETS

Declassified and Approved For Release 2012/05/31 : CIA-RDP88-00218R000300030001-0

Declassified and Approved For Release 2012/05/31 : CIA-RDP88-00218R000300030001-0

- PROVIDE 80 CHANNELS OF 2-WAY AUDIO DISTRIBUTION
- 600 OHM BALANCED INTERFACE
- RECOMMENDED MANUFACTURER: DYNAIR
- PART NUMBER: MADE UP OF AD5370B DISTRIBUTION AMPLIFIERS

Declassified and Approved For Release 2012/05/31 : CIA-RDP88-00218R000300030001-0

Declassified and Approved For Release 2012/05/31 : CIA-RDP88-00218R000300030001-0

FBIS–RECORDING EQUIPMENT–
ARCHIVE RECORDER REQUIREMENTS

- PROVIDE UP TO 80 CHANNELS OF RECORDING
- PROVIDE FOR 24 HOURS OF RECORDING
- PROVIDE IRIG E TIME CODE ANNOTATION
- PROVIDE TAPE SEARCH CAPABILITY
- PROVIDE UP TO 80 CHANNELS OF PLAYBACK

Declassified and Approved For Release 2012/05/31 : CIA-RDP88-00218R000300030001-0

Declassified and Approved For Release 2012/05/31 : CIA-RDP88-00218R000300030001-0

- RECOMMENDED MANUFACTURER: MAGNASYNC/MOVIOLA
- MODEL NUMBER: SPECIALIST
- PROVIDES 25.6 HOURS OF RECORDING PER REEL
- PROVIDES FOR AUTOMATIC SEQUENCING
- FREQUENCY RESPONSE: 300HZ TO 3KHZ

Declassified and Approved For Release 2012/05/31 : CIA-RDP88-00218R000300030001-0

Declassified and Approved For Release 2012/05/31 : CIA-RDP88-00218R000300030001-0

ESL
A Subsidiary of TRW

FBIS–RECORDING EQUIPMENT–
MAGNASYNC SPECIALIST RECORDER

TRW

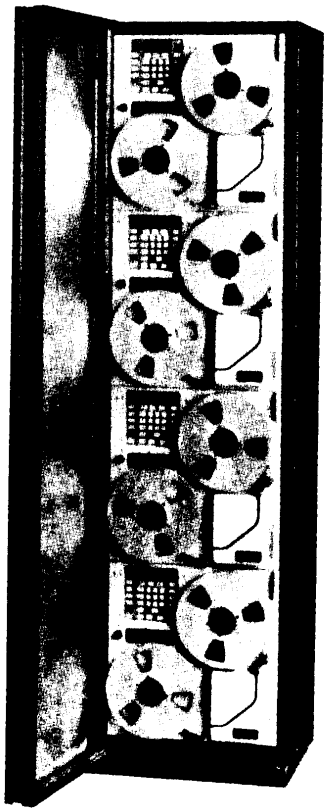

SV00007-12

Declassified and Approved For Release 2012/05/31 : CIA-RDP88-00218R000300030001-0

Declassified and Approved For Release 2012/05/31 : CIA-RDP88-00218R000300030001-0

- SINGLE CHANNEL AUDIO RECORDING
- FREQUENCY RESPONSE: 50 HZ TO 8 KHZ
- ACCEPT IRIG E TIME CODE
- REMOTELY CONTROLLABLE
- INDUSTRIAL QUALITY

- RECOMMENDED MANUFACTURER: TASCAM
- MODEL NUMBER: 133B

Declassified and Approved For Release 2012/05/31 : CIA-RDP88-00218R000300030001-0

Declassified and Approved For Release 2012/05/31 : CIA-RDP88-00218R000300030001-0

- INTERFACE WITH THE IEEE 488 BUS
- PROVIDE UP TO 80 LATCHED PARALLEL TTL OUTPUTS
- SELF CONTAINED CHASSIS

- RECOMMENDED MANUFACTURER: ICS ELECTRONICS CORPORATION
- MODEL NUMBER: 4833
- PROVIDES UP TO 52 OUTPUTS PER UNIT

Declassified and Approved For Release 2012/05/31 : CIA-RDP88-00218R000300030001-0

Declassified and Approved For Release 2012/05/31 : CIA-RDP88-00218R000300030001-0

FBIS–RECORDING EQUIPMENT–
MONITOR SWITCH MATRIX REQUIREMENTS

- FREQUENCY RANGE: 50HZ TO 8KHZ
- 80 INPUTS X 3 OUTPUTS
- MANUALLY CONTROLLED

- RECOMMENDED MANUFACTURER: DYNAIR
- PART NUMBER: SYSTEM 21

Declassified and Approved For Release 2012/05/31 : CIA-RDP88-00218R000300030001-0

Declassified and Approved For Release 2012/05/31 : CIA-RDP88-00218R000300030001-0

- GENERATE A MODULATED IRIG E TIME CODE
- DAYS, HOURS, MINUTES SECONDS
- INITIAL CLOCK START TIME PRESETTABLE FROM FRONT PANEL
- FRONT PANEL TIME DISPLAY
- RECOMMENDED MANUFACTURER: AUSTRON
- MODEL NUMBER: 8120 (GENERATOR)
- MODEL NUMBER: 8132 (READER)

Declassified and Approved For Release 2012/05/31 : CIA-RDP88-00218R000300030001-0

Declassified and Approved For Release 2012/05/31 : CIA-RDP88-00218R000300030001-0

- FREQUENCY RESPONSE: 20HZ TO 8KHZ

- 1 INPUT TO 16 OUTPUTS

- RECOMMENDED MANUFACTURER: DYNAIR

- MODEL NUMBER: COLLECTION OF AD 5370B DISTRIBUTION AMPLIFIERS

Declassified and Approved For Release 2012/05/31 : CIA-RDP88-00218R000300030001-0

Declassified and Approved For Release 2012/05/31 : CIA-RDP88-00218R000300030001-0

- CRT DISPLAY

- IEEE 488 BUS INTERFACE (ABLE TO HANDLE 7 SEPARATE BUSSES)

- PARALLEL OUTPUT

- 2 MB OF MEMORY STORAGE

Declassified and Approved For Release 2012/05/31 : CIA-RDP88-00218R000300030001-0

Declassified and Approved For Release 2012/05/31 : CIA-RDP88-00218R000300030001-0

- COMPUTER-RECOMMENDED MANUFACTURER: IBM

- MODEL NUMBER: PC-AT MODEL 99

Declassified and Approved For Release 2012/05/31 : CIA-RDP88-00218R000300030001-0

Declassified and Approved For Release 2012/05/31 : CIA-RDP88-00218R000300030001-0

FBIS–COLLECTION SUBSYSTEM SOFTWARE HIERARCHY

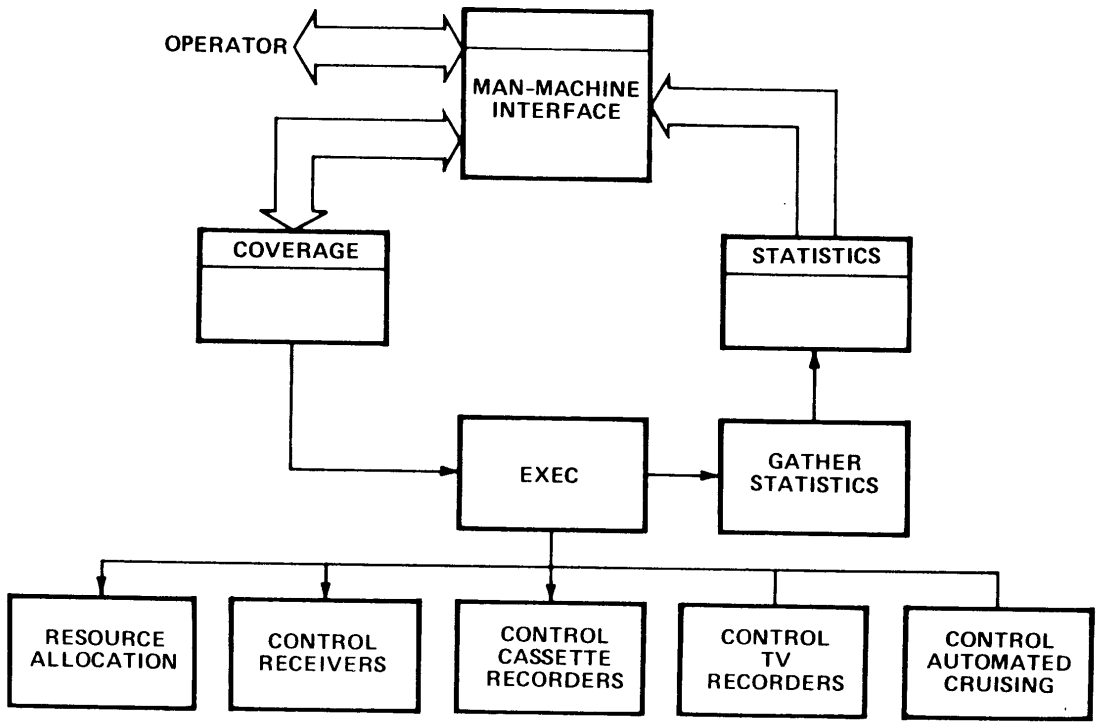

SV00007-15

Declassified and Approved For Release 2012/05/31 : CIA-RDP88-00218R000300030001-0

Declassified and Approved For Release 2012/05/31 : CIA-RDP88-00218R000300030001-0

FBIS–COLLECTION SUBSYSTEM DATA FLOW

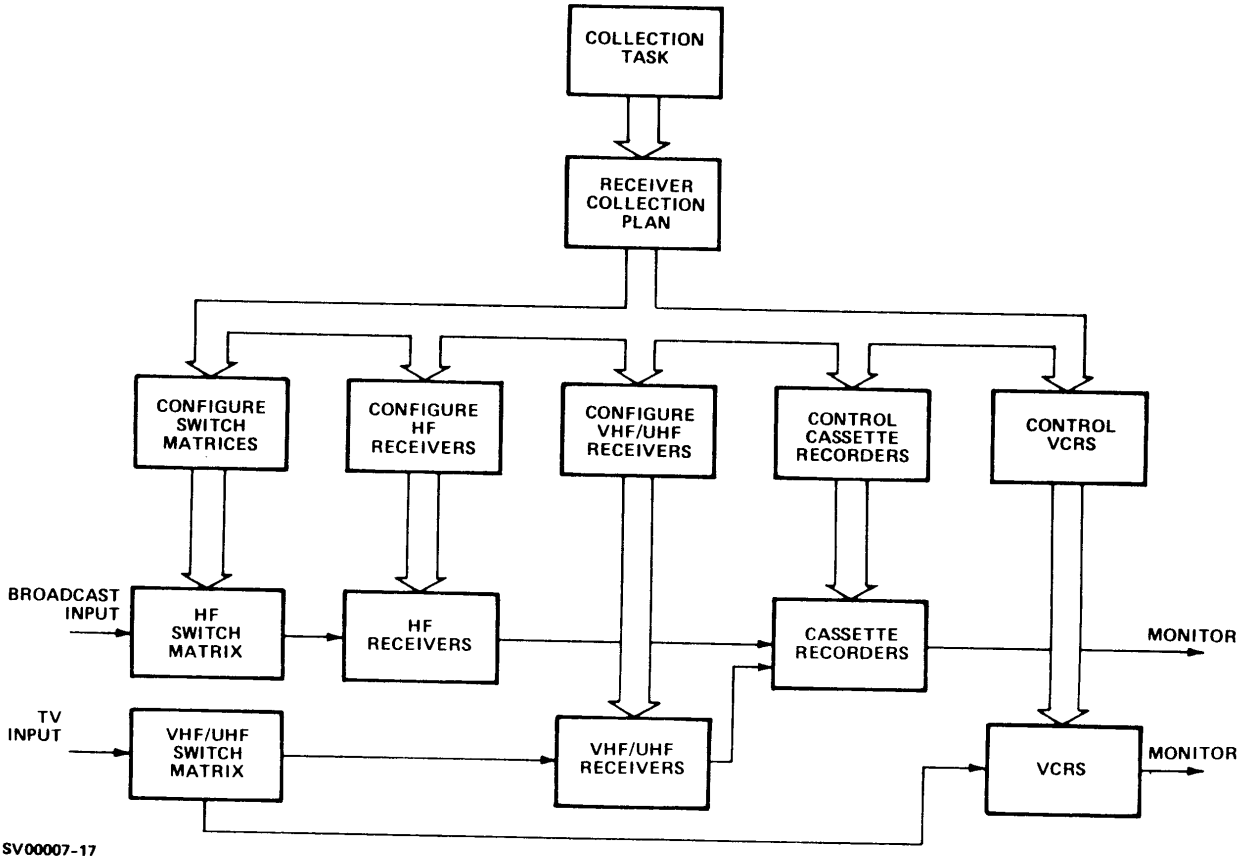

Declassified and Approved For Release 2012/05/31 : CIA-RDP88-00218R000300030001-0

Declassified and Approved For Release 2012/05/31 : CIA-RDP88-00218R000300030001-0

FBIS–AUTOMATED CRUISING DATA FLOW

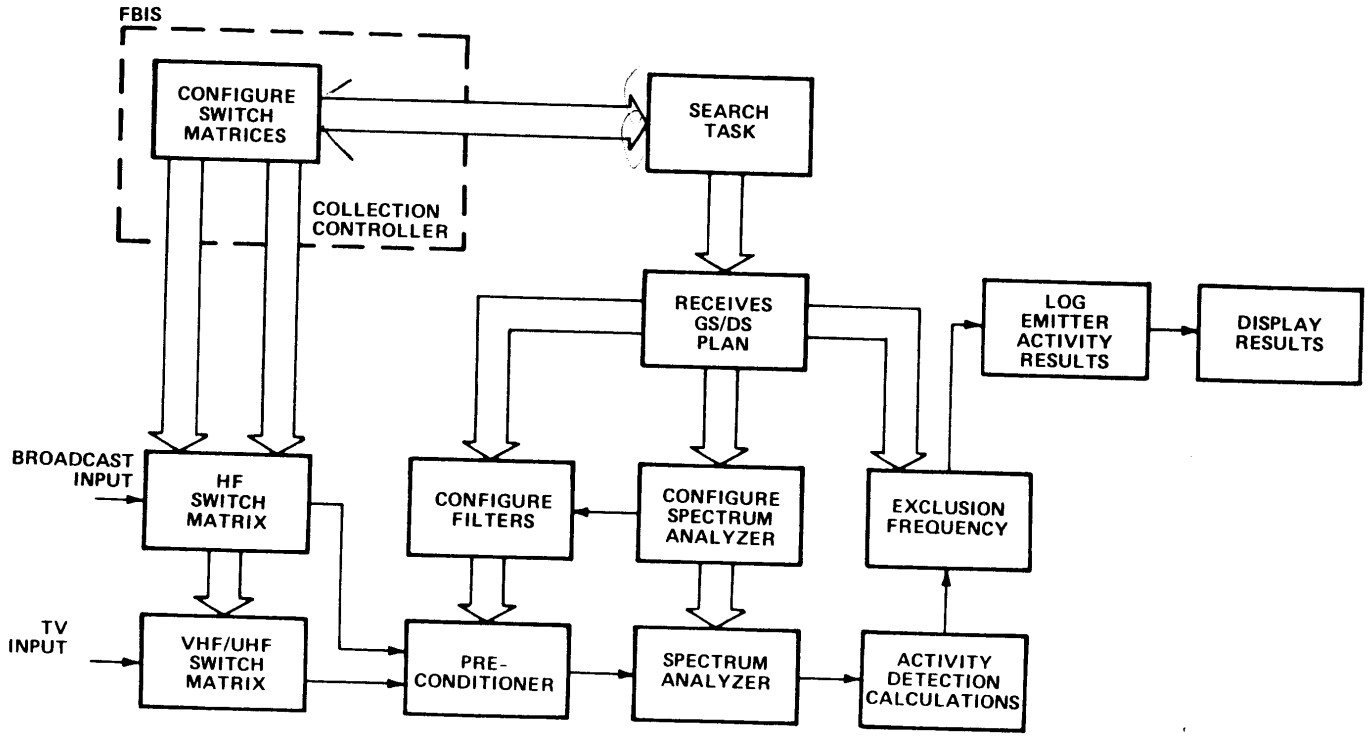

SV00007-16

Declassified and Approved For Release 2012/05/31 : CIA-RDP88-00218R000300030001-0

Declassified and Approved For Release 2012/05/31 : CIA-RDP88-00218R000300030001-0

- BOARDMAN FILE SET-UP
  - USES THE BUREAU COVERAGE SCHEDULE AS COLLECTION BASIS (PREPARED BY M.O.D., PERHAPS MODIFIED BY BUREAU CHIEF)
  - CONTROLLED BY MONITORING ASSIGNMENT SCHEDULES (PREPARED BY DEPUTY BUREAU CHIEF, PERHAPS MODIFIED BY MONITOR SECTION SUPERVISOR)
- COLLECTION OPERATION
  - COLLECTION CONTROLLER SORTS THE HF COVERAGE SCHEDULE BY START TIMES
  - IF MONITORED LIVE, COMPUTER MATCHES EACH BROADCAST AGAINST LIST OF OPERATOR ASSIGNMENTS
  - COMPUTER SELECTS RECEIVER (EACH RECEIVER HAS A DEDICATED CASSETTE RECORDER)
  - OPERATOR LOADS THE RECORDERS WITH TAPE AND LABELS THEM WITH A TAPE NUMBER
  - OPERATOR ENTERS RECEIVER AND ASSOCIATED TAPE NUMBER INTO SYSTEM
  - COMPUTER TUNES AND SETS-UP RECEIVER
  - COMPUTER STARTS RECORDER PRIOR TO BROADCAST
  - COMPUTER STOPS RECORDER AFTER THE SCHEDULED BROADCAST
  - OPERATOR IS NOTIFIED THAT THE BROADCAST HAS BEEN COLLECTED
  - OEPRATOR DISSEMINATES TAPE TO MONITOR

Declassified and Approved For Release 2012/05/31 : CIA-RDP88-00218R000300030001-0

Declassified and Approved For Release 2012/05/31 : CIA-RDP88-00218R000300030001-0

- OPEN SPEAKER WATCH

  OPERATOR NOTIFIES COMPUTER OF NEED FOR CONTINUOUS MONITORING

  COMPUTER DEDICATES A RECEIVER AND RECORDER TO OPEN WATCH

  COMPUTER NOTIFIES OPERATOR OF NEED TO CHANGE TAPES BEFORE TAPE RUNS OUT

  MONITOR CAN REQUEST A TAPE CHANGE AT ANY TIME IN ORDER TO PERFORM A TRANSLATION

Declassified and Approved For Release 2012/05/31 : CIA-RDP88-00218R000300030001-0

Declassified and Approved For Release 2012/05/31 : CIA-RDP88-00218R000300030001-0

- SET-UP COVERAGE SCHEDULE IS AUTOMATIC FROM SOFTCOPY VERSION
- MODIFY COVERAGE SCHEDULE
  - ALLOWS ADDING TO COVERAGE SCHEDULE DURING CRISIS
  - CAN ADD STATIONS UNDERGOING CRUISER'S EVALUATION
  - PERMITS SKIPPING BROADCASTS IN SCHEDULE
  - ALLOWS DUPLICATE COLLECTIONS
- SET-UP OF MONITORS' ASSIGNMENT SCHEDULES CAN BE MADE AUTOMATIC
- MODIFY ASSIGNMENT SCHEDULES
  - PERFORM CHANGING PLANNED SCHEDULES DURING A CRISIS
  - ALLOWS DAILY MODIFICAITONS TO MONITORING ASSIGNMENTS TO COMPENSATE FOR SICKNESS OR LATENESS
- CONFIGURE EQUIPMENT
  - ALTERS DESCRIPTION OF EQUIPMENT TO COMPUTER
  - ALLOWS IDENTIFICATION OF EQUIPMENT OFF-LINE DUE TO MAINTENANCE
- COLLECTION INTERACTION
  - SHOWS STATUS OF ALL EQUIPMENT (ON-LINE/OFF-LINE)
  - PERMITS OPERATOR TO HANDLE PROBLEMS (E.G. REPAIR RECEIVER)
- MAINTENANCE SOFTWARE WILL SUPPORT THE DIAGNOSING AND SERVICING OF EQUIPMENT

Declassified and Approved For Release 2012/05/31 : CIA-RDP88-00218R000300030001-0

Declassified and Approved For Release 2012/05/31 : CIA-RDP88-00218R000300030001-0

RECVR	ANT	STATION	FREQUENCY	START TIME	STOP TIME	RECORDER	TAPE NUMBER
1	7	AAAA	11111	1100	1300	1	1111
	15	JJJJ	12345	1330	1400	1	1111
	23	KKKK	67891	1500	1600	1	1111
	45	LLLL	45671	1600	2300	1	1111
2	4	BBBB	22222	0900	1000	2	5555
3	5	CCCC	33333	0600	0615	3	7777
4	6	DDDD	44444	.	.	4	9999
5	8	EEEE	55555	.	.	5	4444
6	4	FFFF	66666	.	.	6	6666
7	12	GGGG	77777	.	.	7	3333
8	31	HHHH	88888	.	.	.	.
9	9	IIII	99999	.	.	.	.
.	.	.	.	.	.	.	.
.	.	.	.	.	.	.	.
.	.	.	.	.	.	.	.

Declassified and Approved For Release 2012/05/31 : CIA-RDP88-00218R000300030001-0

Declassified and Approved For Release 2012/05/31 : CIA-RDP88-00218R000300030001-0

- OEPRATION IS SIMILAR TO HF BROADCAST COLLECTION
  - OPERATOR CAN SET-UP THE VHF/UHF RECEIVERS IN THE SAME WAY
  - OPERATOR CAN ALSO SET-UP VCR'S
  - OPERATOR CAN MONITOR BOTH TV AUDIO AND AUDIO/VIDEO
- OPERATOR IS AFFORDED SAME FACILITIES AS IN HF BROADCAST COLLECTION TO MODIFY COVERAGE SCHEDULE AND ADJUST MONITORING ASSIGNMENTS
- SOFTWARE IS USED TO CREATE AND MAINTAIN A TV COLLECTION LOG DATA BASE

Declassified and Approved For Release 2012/05/31 : CIA-RDP88-00218R000300030001-0

Declassified and Approved For Release 2012/05/31 : CIA-RDP88-00218R000300030001-0

ESL
A Subsidiary of TRW

FBIS–TV COLLECTION CONFIGURATION FILE

TRW

RECVR	ANT	CHANNEL	FREQUENCY	START TIME	STOP TIME	RECORDER	TAPE NUMBER
1	7	2	11111	1100	1300	1	1111
	15	54	12345	1330	1400	1	1111
	23	7	67891	1500	1600	1	1111
	45	11	45671	1600	2300	1	1111
2	4	60	22222	0900	1000	2	5555
3	5	44	33333	0600	0615	3	7777
4	6	13	44444	.	.	4	9999
5	8	4	55555	.	.	5	4444
6	4	14	66666	.	.	6	6666
7	12	5	77777	.	.	7	3333
8	31	9	88888	.	.	.	.
9	9	20	99999	.	.	.	.
.	.	.	.	.	.	.	.
.	.	.	.	.	.	.	.
.	.	.	.	.	.	.	.

Declassified and Approved For Release 2012/05/31 : CIA-RDP88-00218R000300030001-0

Declassified and Approved For Release 2012/05/31 : CIA-RDP88-00218R000300030001-0

- GENERAL SEARCH SCENARIO
- DIRECTED SEARCH SCENARIO
- HF PROCESSING
- TV AUDIO PROCESSING
- CRUISING MENUS
- CRUISING DISPLAYS

Declassified and Approved For Release 2012/05/31 : CIA-RDP88-00218R000300030001-0

Declassified and Approved For Release 2012/05/31 : CIA-RDP88-00218R000300030001-0

FOR HF BROADCAST ONLY

- SELECT ANTENNA
- SELECT BAND(S) OF INTEREST
- DETECT SIGNALS ABOVE A THRESHOLD WITHIN THE BAND
- REPEAT PROCESS FOR ALL ANTENNAS
- LOG DATA FOR EACH SIGNAL AND FOR EACH ANTENNA
  - TIME OF OCCURRANCE
  - DURATION OF BROADCASTS (ACCUMULATED OCCURRANCES)
  - AMPLITUDE OF EACH SIGNAL
  - ANTENNA CONFIGURATION
  - CARRIER FREQUENCY

Declassified and Approved For Release 2012/05/31 : CIA-RDP88-00218R000300030001-0

Declassified and Approved For Release 2012/05/31 : CIA-RDP88-00218R000300030001-0

- SELECT ANTENNA
- SELECT SIGNALS OF INTEREST
- DETECT SIGNALS ABOVE A THRESHOLD WITHIN THE BAND
- REPEAT PROCESS FOR ALL ANTENNAS
- LOG DATA FOR EACH SIGNAL AND FOR EACH ANTENNA
  - TIME OF OCCURRANCE
  - DURATION OF BRAODCAST (ACCUMULATED OCCURRANCES)
  - AMPLITUDE OF EACH SIGNAL
  - ANTENNA CONFIGURATION
  - CARRIER FREQUENCY

Declassified and Approved For Release 2012/05/31 : CIA-RDP88-00218R000300030001-0

Declassified and Approved For Release 2012/05/31 : CIA-RDP88-00218R000300030001-0

FBIS–AUTOMATED CRUISING–HF PROCESSING

FOR EACH SCAN

- USE A RANK-SELECTED NOISE LEVEL ESTIMATOR TO DETERMINE THE NOISE LEVEL AND TO SET THE THRESHOLD
- CONSIDER ALL VALUES ABOVE THE THRESHOLD TO BE A SIGNAL OF INTEREST
- PERFORM MEDIAN FILTERING TO ELIMINATE NOISE SPIKES
- PERFORM SPECTRAL PEAK-PICKING TO IDENTIFY THE CENTER FREQUENCY OF EACH ACTIVE SIGNAL
- DISCARD ALL SIGNALS NOT OF INTEREST

Declassified and Approved For Release 2012/05/31 : CIA-RDP88-00218R000300030001-0

Declassified and Approved For Release 2012/05/31 : CIA-RDP88-00218R000300030001-0

FBIS–AUTOMATED CRUISING–HF PROCESSING DIAGRAM

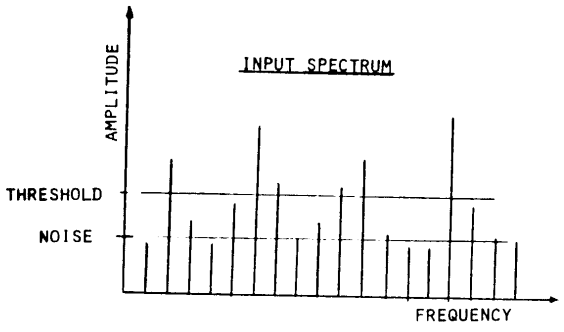

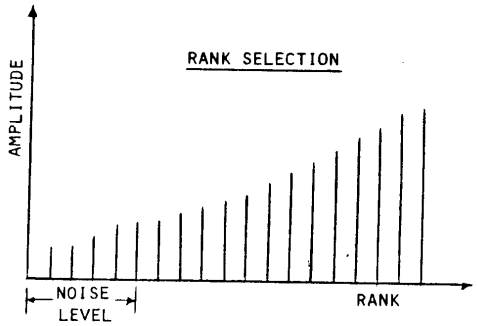

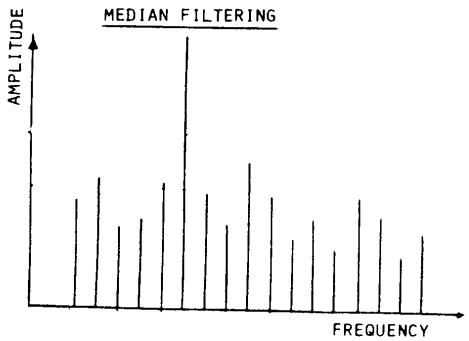

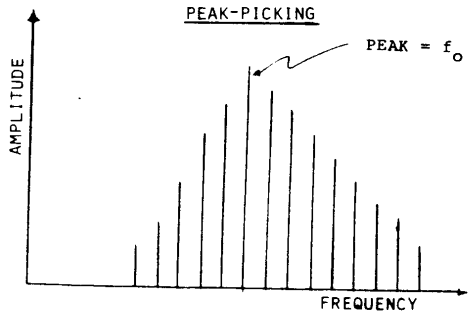

Declassified and Approved For Release 2012/05/31 : CIA-RDP88-00218R000300030001-0

Declassified and Approved For Release 2012/05/31 : CIA-RDP88-00218R000300030001-0

FOR EACH SCAN

- MEASURE THE NOISE LEVEL BETWEEN THE TV BANDS AND SET THE THRESHOLD
- CONSIDER ALL VALUES ABOVE THE THRESHOLD HAVING THE PROPER TV BANDWIDTH TO BE A TV STATION
- DISCARD ALL SIGNALS NOT OF INTEREST

Declassified and Approved For Release 2012/05/31 : CIA-RDP88-00218R000300030001-0

Declassified and Approved For Release 2012/05/31 : CIA-RDP88-00218R000300030001-0

1. HF BROADCAST

2. TELEVISION AUDIO

Declassified and Approved For Release 2012/05/31 : CIA-RDP88-00218R000300030001-0

Declassified and Approved For Release 2012/05/31 : CIA-RDP88-00218R000300030001-0

1. PERFORM GENERAL SEARCH (HF BROADCAST ONLY)

2. PERFORM DIRECTED SEARCH

3. DISPLAY DAILY LOG

4. DISPLAY ACCUMULATED LOG

Declassified and Approved For Release 2012/05/31 : CIA-RDP88-00218R000300030001-0

Declassified and Approved For Release 2012/05/31 : CIA-RDP88-00218R000300030001-0

1. GENERAL SEARCH

A. SET CONFIGURATION PARAMETERS

B. RECALL CONFIGURATION FILES

C. GENERATE CONFIGURATION FILES

D. SET MASKING PARAMETERS

E. RUN GENERAL SEARCH

Declassified and Approved For Release 2012/05/31 : CIA-RDP88-00218R000300030001-0

Declassified and Approved For Release 2012/05/31 : CIA-RDP88-00218R000300030001-0

1. DIRECTED SEARCH

   A. SET CONFIGURATION PARAMETERS
   B. RECALL CONFIGURATION FILES
   C. GENERATE CONFIGURATION FILES
   D. RUN DIRECTED SEARCH

Declassified and Approved For Release 2012/05/31 : CIA-RDP88-00218R000300030001-0

Declassified and Approved For Release 2012/05/31 : CIA-RDP88-00218R000300030001-0

FREQUENCY RANGE (KHZ)	(Y/N)
148.5-283.5	
525-1606.5	
2300-2495	
3200-3400	
3900-4000	
4750-5060	
5950-6200	
7100-7300	
9500-9775	
11700-11975	
15100-15450	
17700-17950	
21450-21750	
25600-26100	

ANTENNA	(Y/N)
1	
2	
3	
4	
5	
6	
7	
8	
9	
10	
11	
12	
13	
14	

Declassified and Approved For Release 2012/05/31 : CIA-RDP88-00218R000300030001-0

Declassified and Approved For Release 2012/05/31 : CIA-RDP88-00218R000300030001-0

FBIS–AUTOMATED CRUISING–REPORTING LOG FILE MENU

1. THE CONTROLLER WILL LOG THE FOLLOWING DATA
   - o TIME OF OCCURANCE
   - o DURATION OF MESSAGE
   - o MAGNITUDE OF EACH SIGNAL
   - o ANTENNA CONFIGURATION INFORMATION (E.G. SIGNAL STRENGTH VS. ANTENNA)
   - o CENTER FREQUENCY OF EACH SIGNAL
2. THE CRUISER CAN PROVIDE ANNOTATIONS TO BE KEPT IN THE FILE BY SIGNAL
3. ASSUMES ONLY ONE STATION BROADCASTS ON A PARTICULAR FREQUENCY

Declassified and Approved For Release 2012/05/31 : CIA-RDP88-00218R000300030001-0

Declassified and Approved For Release 2012/05/31 : CIA-RDP88-00218R000300030001-0

FREQUENCY (KHZ)	MAGNITUDE (1-10)	ANTENNA	COMMENTS
155	5	1	
173	8	5	
236	7	3	
540	6	4	
882	9	2	
2300	4	5	
3380	5	7	
4825	10	6	
4930	7	9	
6015	8	8	
o	o	o	
o	o	o	
o	o	o	
o	o	o	
o	o	o	
o	o	o	
o	o	o	
o	o	o	
o	o	o	

Declassified and Approved For Release 2012/05/31 : CIA-RDP88-00218R000300030001-0

Declassified and Approved For Release 2012/05/31 : CIA-RDP88-00218R000300030001-0

FBIS–CRUISING–DURATION VS FREQUENCY DISPLAY


```
                                  DURATION
FREQUENCY  00000000000000000000111111111111111111111222222222
 (KHZ)     00112233445566778899001122334455667788990011223 34 START STOP
           03030303030303030303030303030303030303030303030 30 TIME  TIME
           00000000000000000000000000000000000000000000000 00
--------   ---------------------------------------------------      ----
155                                XXXXXXXXXXXXXXXXXX
173                        XXXXXXXXXXXXXXXXXXXXXXXXXXXXXXXXX
236                                          XXXXXXXXXXXX
540            XXXXXXXXXXXXXXXXXXXXXXXXXXXXXXXXXXXXXXXXXXXXXXX
882                          XXXXXXXXXXXXXXXXXXXXXX
2300                      XXXXXXXXXXXXXXXXXXXXXXXXXXXXXXXX
3380                               XXXXX
4825             XXXXXXXXXXXXXXXXXXXXXXXXXXXXXXXXXXXXX
4930                                       XXXXXX
6015                XXXXX             XXXXXX      XXXXX
```

Declassified and Approved For Release 2012/05/31 : CIA-RDP88-00218R000300030001-0

Declassified and Approved For Release 2012/05/31 : CIA-RDP88-00218R000300030001-0

- CRUISING RECORDERS SUPPORT EVALUATION OF NEW SOURCES FOR QUALITY ANALYSIS
- EACH RECEIVER WILL HAVE ITS AUDIO OUTPUT ROUTED TO A TAPE RECORDER
- AUTOMATIC TAPE RECORDING CAN BE INITIATED BY THE SUBSYSTEM CONTROLLER
- INDIVIDUAL SIGNALS CAN BE MONITORED USING THE RECEIVERS
- TAPE RECORDER OUTPUTS CAN BE MONITORED

Declassified and Approved For Release 2012/05/31 : CIA-RDP88-00218R000300030001-0

Declassified and Approved For Release 2012/05/31 : CIA-RDP88-00218R000300030001-0

- ARCHIVE RECORDER
  - RECORDER WILL OPERATE 24 HRS A DAY
  - RECORDER WILL HAVE A BACKUP
  - BACKUP RECORDER CAN ALSO SERVE AS THE PLAYBACK RECORDER
  - ACTIVE RECORDER WILL AUTOMATICALLY SEQUENCE TO BACKUP IN EVENT OF FAILURE
  - AUTOMATIC SEARCH WILL BE USED TO FIND BROADCAST OF INTEREST
  - BROADCAST CAN BE MONITORED USING THE MONITOR SWITCH AND HEADSET OR LOUDSPEAKER IF NECESSARY
  - CASSETTE RECORDER AVAILALBE FOR DUPLICATION OF BROADCAST
- CASSETTE RECORDERS
  - NUMBER OF CASSETTE RECORDERS EQUALS THE NUMBER OF RECEIVERS
  - RECORDERS CONTROLLED BY COLLECTION CONTROLLER
  - RECORDER OUTPUTS CAN BE MONITORED WITH A HEADSET
- TV CASSETTE RECORDERS
  - TV VIDEO CASSETTE RECORDERS ARE CONTROLLED BY COLLECTION CONTROLLER
  - TIME/DATE/CHANNEL ARE ANNOTATED IN VIDEO
  - ALL VCRS CAN BE MONITORED ONE-AT-A-TIME

Declassified and Approved For Release 2012/05/31 : CIA-RDP88-00218R000300030001-0

Declassified and Approved For Release 2012/05/31 : CIA-RDP88-00218R000300030001-0

1. AUDIO RECORDING

2. VIDEO RECORDING

Declassified and Approved For Release 2012/05/31 : CIA-RDP88-00218R000300030001-0

Declassified and Approved For Release 2012/05/31 : CIA-RDP88-00218R000300030001-0

ESL
A Subsidiary of TRW

FBIS–RECORDING–AUDIO CONFIGURATION FILE MENU

TRW

TAPE NO.	SEL	CASSETTE RECORDER	RECORDING STATUS	START RECORD	STOP RECORDING	RECORD STATUS
1	A	1	COMPLETED	0900	0915	
	B		*	1000	1030	RECORD
	C		*	1100	1105	
	D		*	1200	1215	
2	A	2	COMPLETED	.	.	
	B		COMPLETED	.	.	
	C		COMPLETED	.	.	STOP
	D		*			
3	A	3	*			STOP
	B		*			
	C		*			
	D		*			
4		4	RECORDING			
5		5	*			OFF LINE
6		6	*			
7		7	COMPLETED			
8		8	*			
9		9	*			
.		.	.			
.		.	.			
.		.	.			
.		.	.			

Declassified and Approved For Release 2012/05/31 : CIA-RDP88-00218R000300030001-0

Declassified and Approved For Release 2012/05/31 : CIA-RDP88-00218R000300030001-0

ESL
A Subsidiary of TRW

FBIS–RECORDING–VIDEO CONFIGURATION FILE MENU

TRW

TAPE NO.	SEL	CASSETTE RECORDER	RECORDING STATUS	START RECORD	STOP RECORDING	RECORD STATUS
1	A	1	COMPLETED	0900	0915	
	B		*	1000	1030	RECORD
	C		*	1100	1105	
	D		*	1200	1215	
2	A	2	COMPLETED	.	.	
	B		COMPLETED	.	.	
	C		COMPLETED	.	.	STOP
	D		*			
3	A	3	*			STOP
	B		*			
	C		*			
	D		*			
4		4	RECORDING			
5		5	*			OFF LINE
6		6	*			
7		7	COMPLETED			
8		8	*			
9		9	*			
.		.	.			
.		.	.			
.		.	.			
.		.	.			

Declassified and Approved For Release 2012/05/31 : CIA-RDP88-00218R000300030001-0

Declassified and Approved For Release 2012/05/31 : CIA-RDP88-00218R000300030001-0

- FLEXIBLE AND ADAPTABLE SYSTEM
- RELIABLE UNITS
- MAINTAINABLE
- SOFTWARE CONFIGURABLE
- EASY TO OPERATE

Declassified and Approved For Release 2012/05/31 : CIA-RDP88-00218R000300030001-0

Declassified and Approved For Release 2012/05/31 : CIA-RDP88-00218R000300030001-0

- One IP/S Design Satisfies Requirements of all Bureaus
- Modularity Permits Bureaus to be Configured According to Size
- The Design Can be Implemented with Very Few Risks
- Hardware Cost is Much Less Than Alternative Approaches
- Designed for a 10 Year Lifetime -- Including Growth
- Multi-Lingual Text Processing is Integrated into Monitors' W/S
- Design is Very Operable -- Simple to Use
- Extensive Employment of Hardware and Data Redundancy Guarantees Availability
- Maintenance Procedures are Simple and Straightforward -- Hardware Failures are Easy to Recover From

Declassified and Approved For Release 2012/05/31 : CIA-RDP88-00218R000300030001-0

Declassified and Approved For Release 2012/05/31 : CIA-RDP88-00218R000300030001-0

ESL
A Subsidiary of TRW

FBIS–INFORMATION PROCESSING SUBSYSTEM FUNCTIONAL BLOCK DIAGRAM

TRW

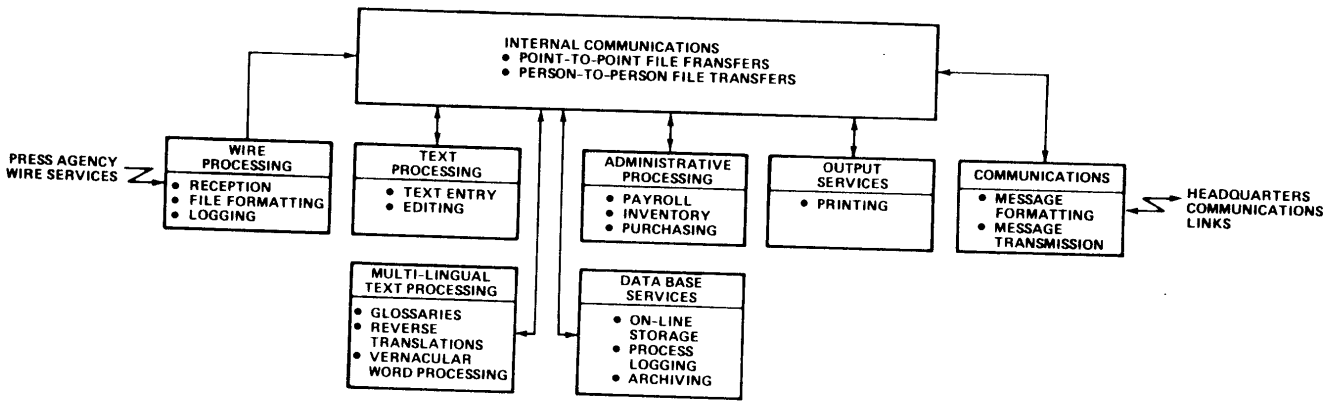

SV00007-3

Declassified and Approved For Release 2012/05/31 : CIA-RDP88-00218R000300030001-0

Declassified and Approved For Release 2012/05/31 : CIA-RDP88-00218R000300030001-0

ESL
A Subsidiary of TRW

FBIS–BUREAU HARDWARE BLOCK DIAGRAM

TRW

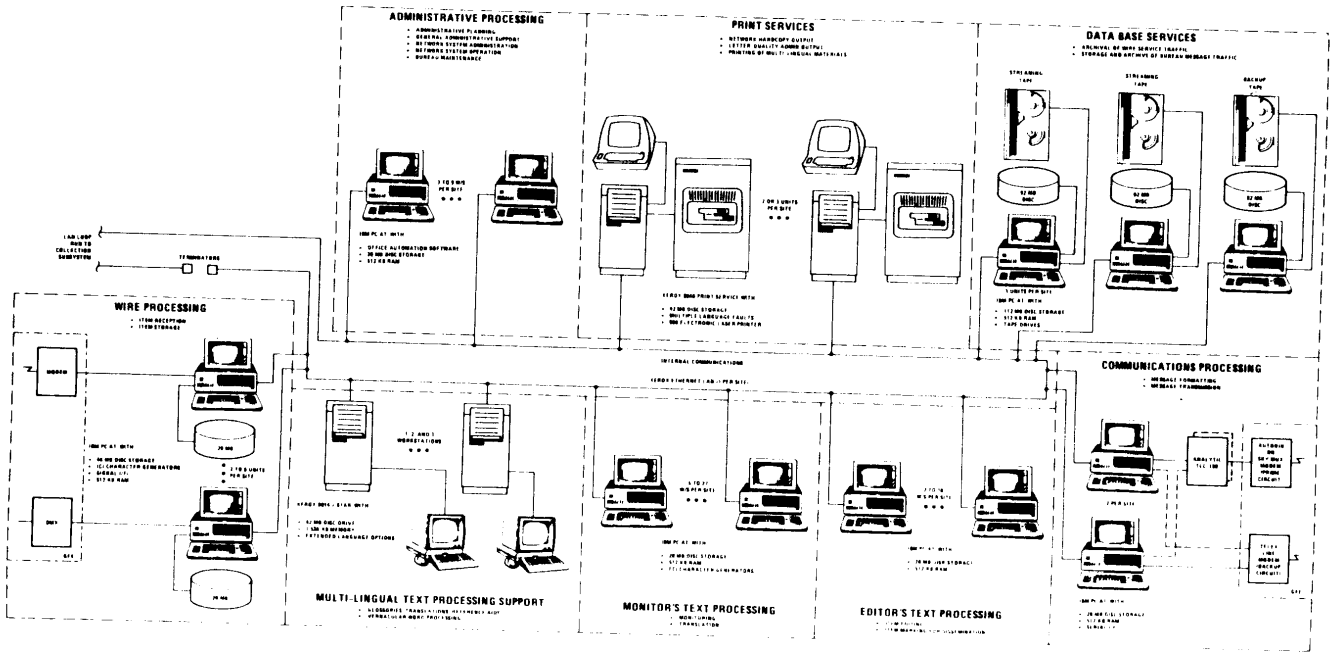

Declassified and Approved For Release 2012/05/31 : CIA-RDP88-00218R000300030001-0

Declassified and Approved For Release 2012/05/31 : CIA-RDP88-00218R000300030001-0

FBIS–BUREAU SOFTWARE HIERARCHY

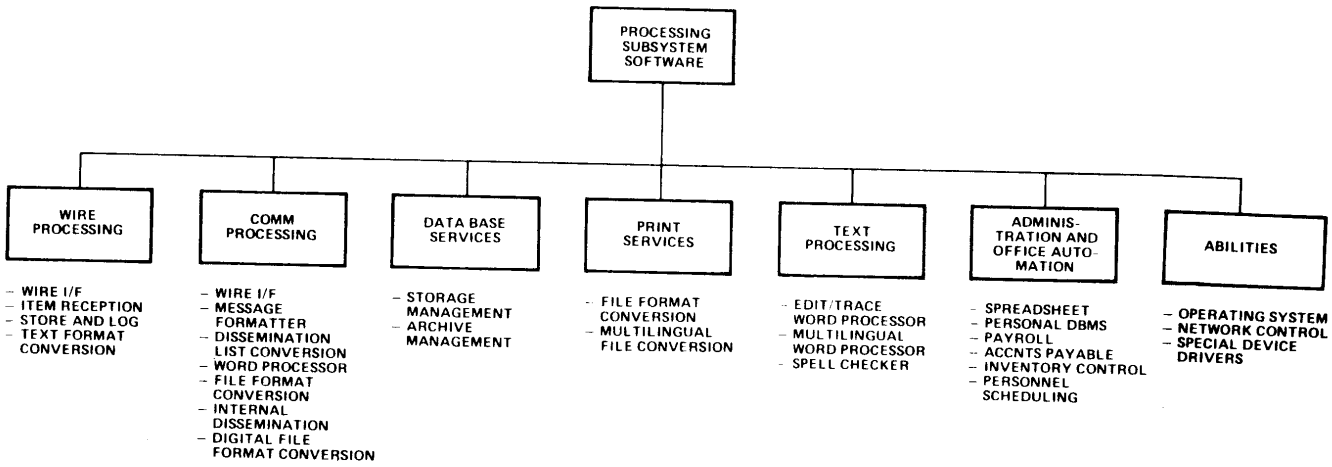

SV00007-8

Declassified and Approved For Release 2012/05/31 : CIA-RDP88-00218R000300030001-0

Declassified and Approved For Release 2012/05/31 : CIA-RDP88-00218R000300030001-0

FBIS–SUBSYSTEM INTERFACES

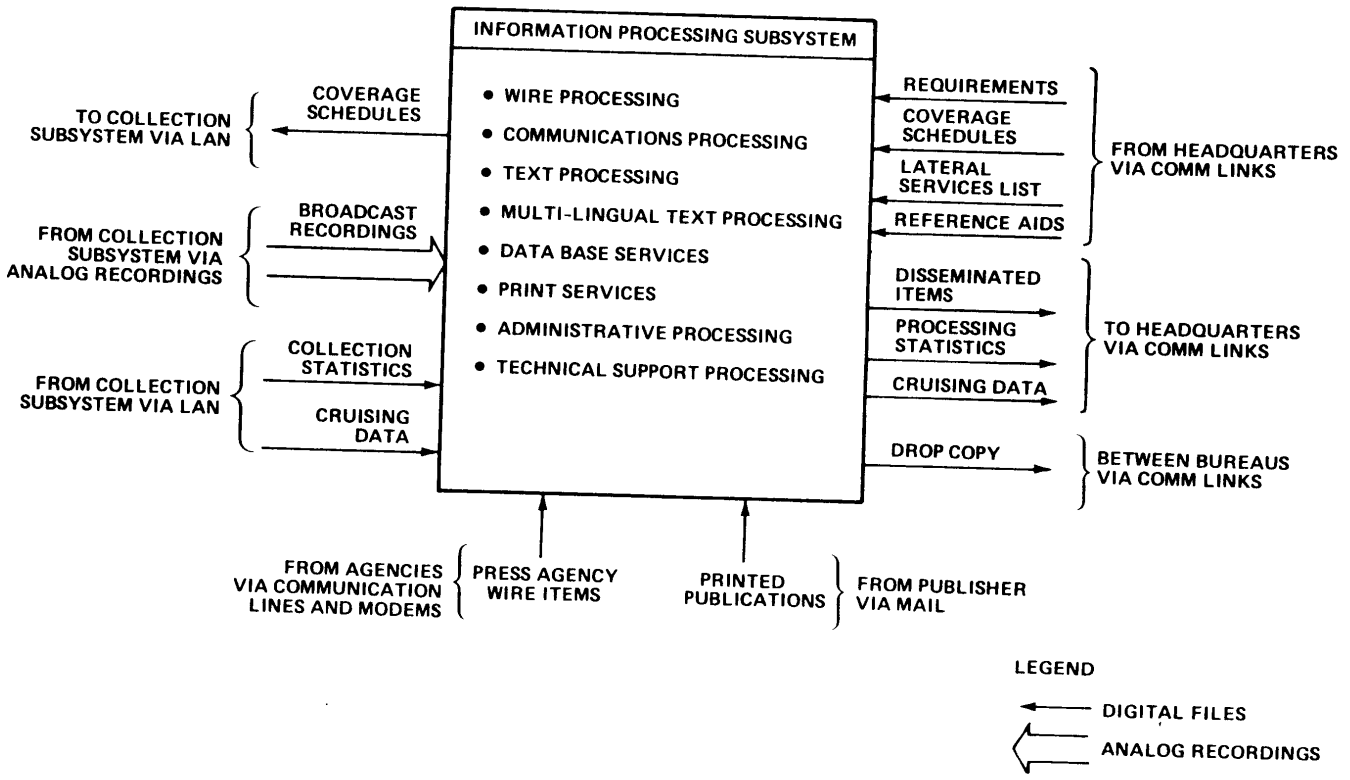

SV00007-7

Declassified and Approved For Release 2012/05/31 : CIA-RDP88-00218R000300030001-0

Declassified and Approved For Release 2012/05/31 : CIA-RDP88-00218R000300030001-0

- Collection Subsystem/Cruising Controller
  - All Interaction is via LAN Network Messages & Files
  - The Comm Server Relays Cruising Coverage, and Cruising Data, to and from Headquarters
- Collection Subsystem/Collection Controller
  - All Interaction is via LAN Network Messages & Files
  - The Comm Server Receives the Broadcast Coverage Schedule and Copies it to the Collection Controller
  - Collection Statistics are Stored by the File Server (E.G., Directory of Archive Tape)
- Collection Subsystem/Receivers & Recorders
  - Recordings of Broadcast Material are Received in a Manner that Depends on the Bureau's Operation, Either:
    - Direct Transmission to Monitor's Recorder, or
    - Receipt of Recorded Cassette Tape

Declassified and Approved For Release 2012/05/31 : CIA-RDP88-00218R000300030001-0

Declassified and Approved For Release 2012/05/31 : CIA-RDP88-00218R000300030001-0

FBIS–SEGMENT EXTERNAL I/F DESCRIPTIONS

- Press Agency Wire Services
  - Transmission via Leased Lines or Radio Teletype
  - Analog Signals Converted to Digital Async Serial I/F, Such as RS-232C by Existing GFE Modems
- Publication Distribution
  - Receipt in Mail of Printed Material
- From Headquarters
  - All Transmissions Received by Comm Server
  - Files Stored by File Server or Copied to Collection Sub.
- To Headquarters
  - All Material Transmitted Through Comm Server
  - Material Sent from Editor's or Admin Work Station
- Between Bureaus
  - All Material Transmitted Through Comm Server
  - All Material Sent from Editor's or Admin Work Station

Declassified and Approved For Release 2012/05/31 : CIA-RDP88-00218R000300030001-0

Declassified and Approved For Release 2012/05/31 : CIA-RDP88-00218R000300030001-0

THE IBM PC FORMS THE BASIS FOR ALL WORKSTATIONS AND SERVER NODES:

PC PROCESSOR

- OVERALL, 2 TO 3 TIMES FASTER THAN PREVIOUS IBM PCS
- USES NEW, INTEL 20286 MICROPROCESSOR CHIP
  - 6 MHZ CLOCK -- 25% FASTER THAN THE IBM PC
- STANDARD 512 KBYTES OF RAM MEMORY
  - EQUIVALENT TO 256 TYPEWRITTEN PAGES
  - EXPANDABLE TO 3 MBYTES OF RAM

STORAGE

- HIGH-CAPACITY FLOPPY DISK DRIVE
  - FASTER THAN OLDER FLOPPY DRIVES
  - 1.2 MBYTES OF STORAGE
  - HOLDS EQUIVALENT OF 600 TYPEWRITTEN PAGES
- 20 MBYTE HARD DISK
  - TWICE AS FAST AS THE XT'S DRIVE
  - MOUNTED IN THE CHASSIS
  - HAS FAST, 40 MILLISECOND AVERAGE ACCESS TIME
  - HOLDS EQUIVALENT OF 10,000 TYPEWRITTEN PAGES

Declassified and Approved For Release 2012/05/31 : CIA-RDP88-00218R000300030001-0

Declassified and Approved For Release 2012/05/31 : CIA-RDP88-00218R000300030001-0

KEYBOARD

- NEW, IMPROVED KEYBOARD FROM PC XT
- DIVIDED INTO 3 SECTIONS:
  - 10 FUNCTION KEYS
  - SELECTRIC-LIKE KEYBOARD
  - NUMERIC KEYPAD
- IBM ADDED LEDS TO INDICATE CAPS, NUMERIC, AND SCROLL LOCK
- HAS LONGER, 10-FOOT CABLE

MONITOR

- IBM MONOCHROME MONITOR
- 11 1/2" (DIAGONAL) ANTI-GLARE SCREEN
- DISPLAYS 25 LINES OF 80 CHARACTERS

Declassified and Approved For Release 2012/05/31 : CIA-RDP88-00218R000300030001-0

Declassified and Approved For Release 2012/05/31 : CIA-RDP88-00218R000300030001-0

FBIS–PC W/S MISC FEATURES

- Key Lockable -- Controls Physical Access

- IBM Supports an Open Architecture -- Allows Second Party Vendors to Provide Additional Products, Such as:
  - Oversized Monitors
  - High-Capacity Disks
  - Printers
  - Local Area Networks
  - Color Monitors
  - Tape Drives
  - Memory
  - Special Devices

- As a Well-Established Vendor, IBM Can Assure Support for the Lifetime of the Installed Equipment

Declassified and Approved For Release 2012/05/31 : CIA-RDP88-00218R000300030001-0

Declassified and Approved For Release 2012/05/31 : CIA-RDP88-00218R000300030001-0

HARDWARE

- IBM PC AT, MODEL 99
- NETWORK INTERFACE
- FOREIGN LANGUAGE ENHANCEMENTS:
  - EASTERN COMPUTER CHARACTER GENERATOR BOARD
  - GRAPHICS BOARD
  - CONFIGURED TO SUPPORT A SINGLE FOREIGN LANGUAGE

SOFTWARE

- EASTERN COMPUTER MULTILINGUAL WORD PROCESSOR
  - USED TO DISPLAY FOREIGN LANGUAGE WIRE SUMMARIES
  - ALSO USED TO ACCESS REFERENCE MATERIALS CONTAINING FOREIGN LANGUAGES
- XYWRITE II-PLUS WORD PROCESSOR
  - USED FOR TRANSLATION
- WORD PROOF SPELL CHECKER
- 'RECORD KEEPER' -- USER INTERFACE TO DBMS
- 'TASK KEEPER" -- USER INTERFACE TO ADMINISTRATION FILES

Declassified and Approved For Release 2012/05/31 : CIA-RDP88-00218R000300030001-0

Declassified and Approved For Release 2012/05/31 : CIA-RDP88-00218R000300030001-0

- ALL NORMAL MONITORING FUNCTIONS ARE SUPPORTED:
  - RADIO & TV BROADCAST MONITORING, MONITOR'S SELECTION
  - RADIO & TV BROADCAST TRANSLATION
  - PRESS AGENCY WIRE MONITORING & SELECTION IN SOFTCOPY
  - PRESS AGENCY WIRE ITEM TRANSLATION
  - CREATION OF PRESS AGENCY SUMMARIES FOR HARDCOPY FAX
  - ACCESS TO REFERENCE MATERIALS
  - ACCESS TO MULTILINGUAL TRANSLATION AIDS
  - SOFTCOPY REVIEW OF DISSEMINATED ITEMS
  - SOFTCOPY REVIEW OF EDITORIAL CHANGES, FOR TRAINING
  - CREATION OF PERSONAL FILES; STORED ON FLOPPY DISK
- 'TASK KEEPER' IS USED TO KEEP TRACK OF ASSIGNMENTS
- 'RECORD KEEPER' IS USED TO MANAGE SUMMARIES AND ITEMS
- ECI AND XYWRITE WORD PROCESSORS ARE USED IN TRANSLATION

Declassified and Approved For Release 2012/05/31 : CIA-RDP88-00218R000300030001-0

Declassified and Approved For Release 2012/05/31 : CIA-RDP88-00218R000300030001-0

- 'Task Keeper' Provides Interaction with the Data Base of Assigned Monitoring Tasks
  - Displays Assigned Tasks
  - Used to Track Work Status
  - Manages Task Assignment List Files
- 'Record Keeper' Manages the Progression of a Monitor's Work by Associating Source Summaries and Translated Items with the Task Assignment List
  - Used to Build Program Summaries and Press Selection Lists
  - Edits Press Agency Summaries
  - Used to Edit and Select Items form Program Summaries, Press Selection Lists, or Press Agency Summaries
  - Sets up Control of a Source Summary in the Data Base Server
  - Releases Translated Items to Editor
  - Dispatches Edited Items to the Comm Server
  - Updates Source Summary at Completion of Translation, Editing, and Dissemination
  - Also Used to Browse Through Bureau's Disseminated Items in Softcopy, Requested by Date, Time, Person's Name
- Menu Program Forms an Applications Interface that Reduces Typing by Using a Menu to Invoke Programs

Declassified and Approved For Release 2012/05/31 : CIA-RDP88-00218R000300030001-0

Declassified and Approved For Release 2012/05/31 : CIA-RDP88-00218R000300030001-0

- XYWRITE IS THE PRIMARY WORD PROCESSOR
  - HAS EXTENSIVE ARRAY OF FUNCTIONS, SUITABLE FOR ADMINISTRATIVE WORD PROCESSING AS WELL
  - FAST -- HOLDS TEXT FILES IN MEMORY
  - HAS EXTENSIVE MACRO AND PROGRAMMING CAPABILITIES -- THESE WILL BE USED TO CREATE THE EDIT/TRACE FUNCTION
  - HAS TOTAL CUSTOMIZATION POSSIBILITIES -- CAN BE TAILORED TO SUIT THE PREFERENCES OF EACH INDIVIDUAL
  - OFFERS KEYBOARD DEFINITION UNDER PROGRAM CONTROL -- WILL BE ABLE TO DO SOME MULTILINGUAL PROCESSING
  - CAN RUN OTHER PROGRAMS FROM WITHIN XYWRITE, SUCH AS A SPELLING DICTIONARY
  - HELP SCREENS ARE AVAILABLE, AND CAN BE ADDED TO
  - HAS FEATURES LIKE SPLIT SCREEN (BOTH VERTICAL AND HORIZONTAL), DUAL SCREENS, FOOTNOTING, TABLE OF CONTENTS, INDEXING, FORMS DOCUMENT, AND MORE
- EASTERN COMPUTERS WORD PROCESSOR WILL BE USED WHEN FOREIGN LANGUAGE TEXT IS DISPLAYED AT A MONITORS WORK STATION
  - ALSO BE USED TO SUPPORT REFERENCE AIDS FOR SOME LANGUAGES (LANGUAGES IN WHICH A PRESS AGENCY WIRE TRANSMITS)
- XEROX STAR WORD PROCESSING SOFTWARE WILL BE USED FOR ALL OTHER MULTILINGUAL WORK
  - TRANSLATION AND REFERENCE AIDS FOR ALL OTHER LANGUAGES
  - REVERSE TRANSLATIONS
  - VERNACULAR WORD PROCESSING

Declassified and Approved For Release 2012/05/31 : CIA-RDP88-00218R000300030001-0

Declassified and Approved For Release 2012/05/31 : CIA-RDP88-00218R000300030001-0

EQUIPMENT

- XEROX STAR WORKSTATION
- 1.5 MBYTES OF RAM MEMORY
- 42 MBYTES OF HARD DISK STORAGE
- EXTENDED LANGUAGE OPTIONS
- TABLEWARE TO SUPPORT ALL FOREIGN LANGUAGES USED BY BUREAU

USE

- AUGMENTS THE MULTILINGUAL CAPABILITIES OF MONITORS W/S
- SUPPORTS MULTILINGUAL TRANSLATIONS AIDS FOR LANGUAGES NOT SUPPORTED BY ANY OF THE ECI-EQUIPPED WORKSTATIONS
- TRANSLATION AIDS CAN BE USED IN SOFTCOPY AT THE STAR WORKSTATION, OR HARDCOPIES MADE ON THE LASER PRINTER

Declassified and Approved For Release 2012/05/31 : CIA-RDP88-00218R000300030001-0

Declassified and Approved For Release 2012/05/31 : CIA-RDP88-00218R000300030001-0

EDITOR'S PC W/S IS IDENTICAL TO MONITORS W/S,
BUT WITHOUT THE MULTILINGUAL CAPABILITIES:

HARDWARE

- IBM PC AT, MODEL 99
- NETWORK INTERFACE

SOFTWARE

- XYWRITE II-PLUS WORD PROCESSOR
  - USED FOR EDITING
- WORD PROOF SPELL CHECKER
- 'RECORD KEEPER' -- USER INTERFACE TO DBMS
- 'TASK KEEPER" -- USER INTERFACE TO ADMINISTRATION FILES

Declassified and Approved For Release 2012/05/31 : CIA-RDP88-00218R000300030001-0

Declassified and Approved For Release 2012/05/31 : CIA-RDP88-00218R000300030001-0

- ALL NORMAL EDITING FUNCTIONS ARE SUPPORTED:
  - SOFTCOPY EDITING OF MONITOR'S TRANSLATED ITEMS
  - FORMATTING OF ITEMS FOR DISTRIBUTION
  - PRIORITIZING AND CODING ITEMS FOR DISSEMINATION
  - ENGLISH LANGUAGE WIRE MONITORING & SELECTION IN SOFTCOPY
  - SOFTCOPY REVIEW OF DISSEMINATED ITEMS
  - ACCESS TO REFERENCE MATERIALS
  - SOFTCOPY REVIEW OF EDITORIAL CHANGES, FOR TRAINING
  - CREATION OF PERSONAL FILES; STORED ON FLOPPY DISK
- 'TASK KEEPER' IS USED TO KEEP TRACK OF ASSIGNMENTS
- 'RECORD KEEPER' IS USED TO MANAGE SUMMARIES AND ITEMS
- XYWRITE WORD PROCESSOR IS USED FOR EDITING

Declassified and Approved For Release 2012/05/31 : CIA-RDP88-00218R000300030001-0

Declassified and Approved For Release 2012/05/31 : CIA-RDP88-00218R000300030001-0

HARDWARE

- IBM PC AT, Model 99
- Network Interface
- Foreign Language Enhancements:
  - Eastern Computer Character Generator Board
  - Graphics Board
  - Configured to Support a up to Two Foreign Languages
- Extra 20 MByte IBM Disk Drive
- Two, Serial Interface Cards to Accept Output from Line Modems or Radio Teletype Demultiplexers

SOFTWARE

- Eastern Computer Multilingual Word Processor
  - Used to Continuously Display Foreign Language Wire Logs
- Wire Service Executive Program
  - Provides Character and Format Conversion
  - Formats Items into Standard FBIS Message Format
  - Logs Each Received Item
  - Stores Each Item on Local Disk
  - Makes a Backup Copy of Each Item in the Data Base Server

Declassified and Approved For Release 2012/05/31 : CIA-RDP88-00218R000300030001-0

Declassified and Approved For Release 2012/05/31 : CIA-RDP88-00218R000300030001-0

ESL
A Subsidiary of TRW

FBIS–WIRE SERVICE STORAGE SIZING (1 OF 3)

TRW

BUREAU:	ABIDJAN	AUSTRIAN	BANGKOK	GULF	HONG KONG
CURRENT WIRE TRAFFIC (IN KWORDS/DAY)	390	425	200	185	300
CURRENT # OF WIRES	7	7	10	5	2
CURRENT WIRE TRAFFIC					
- AGGREGATE (MBYTES/DAY)	3.90	4.25	2.00	1.85	3.00
- PER WIRE (MBYTES/DAY)	.56	.61	.20	.37	1.50
FUTURE WIRE TRAFFIC 5 YRS. -- 20% PER YR.					
- AGGREGATE (MBYTES/DAY)	9.70	10.57	4.98	4.60	7.46
- PER WIRE (MBYTES/DAY)	1.39	1.51	0.50	0.42	3.73
FUTURE WIRE TRAFFIC 10 YRS. -- 20% PER YR.					
- AGGREGATE (MBYTES/DAY)	24.14	26.31	12.38	11.45	18.57
- PER WIRE (MBYTES/DAY)	3.45	3.76	1.24	2.29	9.28

Declassified and Approved For Release 2012/05/31 : CIA-RDP88-00218R000300030001-0

Declassified and Approved For Release 2012/05/31 : CIA-RDP88-00218R000300030001-0

FBIS–WIRE SERVICE STORAGE SIZING (2 OF 3)

BUREAU:	JORDAN	KEY WEST	LONDON	NICOSIA	OKINAWA
CURRENT WIRE TRAFFIC (IN KWORDS/DAY)	230	100	---	330	675
CURRENT # OF WIRES	7	3	---	4	17
CURRENT WIRE TRAFFIC					
- AGGREGATE (MBYTES/DAY)	2.30	1.00	---	3.30	6.75
- PER WIRE (MBYTES/DAY)	.33	.33	---	.83	.40
FUTURE WIRE TRAFFIC 5 YRS. -- 20% PER YR.					
- AGGREGATE (MBYTES/DAY)	5.72	2.49	---	8.21	16.79
- PER WIRE (MBYTES/DAY)	.82	.83	---	2.05	.99
FUTURE WIRE TRAFFIC 10 YRS. -- 20% PER YR.					
- AGGREGATE (MBYTES/DAY)	14.24	6.19	---	20.43	41.78
- PER WIRE (MBYTES/DAY)	2.03	2.06	---	5.11	2.45

Declassified and Approved For Release 2012/05/31 : CIA-RDP88-00218R000300030001-0

Declassified and Approved For Release 2012/05/31 : CIA-RDP88-00218R000300030001-0

FBIS–WIRE SERVICE STORAGE SIZING (3 OF 3)

BUREAU:	PANAMA	PARAGUAY	SEOUL	SWAZILAND	TEL AVIV
CURRENT WIRE TRAFFIC (IN KWORDS/DAY)	675	770	70	160	100
CURRENT # OF WIRES	8	6	3	1	4
CURRENT WIRE TRAFFIC					
– AGGREGATE (MBYTES/DAY)	6.75	7.70	0.70	1.60	1.00
– PER WIRE (MBYTES/DAY)	.84	1.28	.23	1.60	.25
FUTURE WIRE TRAFFIC 5 YRS. -- 20% PER YR.					
– AGGREGATE (MBYTES/DAY)	16.99	19.16	1.74	3.98	2.48
– PER WIRE (MBYTES/DAY)	2.10	3.19	.58	3.98	.62
FUTURE WIRE TRAFFIC 10 YRS. -- 20% PER YR.					
– AGGREGATE (MBYTES/DAY)	41.78	47.66	4.33	9.90	6.19
– PER WIRE (MBYTES/DAY)	5.22	7.94	1.44	9.90	1.55

Declassified and Approved For Release 2012/05/31 : CIA-RDP88-00218R000300030001-0

Declassified and Approved For Release 2012/05/31 : CIA-RDP88-00218R000300030001-0

FBIS–WIRE SERVICE SIZING SUMMARY

- Current Traffic Averages 0.5 MBytes/Day per Wire
- A 249% Growth Rate Over 5 Years Will Increase the Amount of Traffic to 1+ MBytes/Day per Wire
- A 619% Growth Rate Over 10 Years Will Result in Traffic that Averages 3 to 4 MBytes/Day per Wire
- Current Traffic Rate Permit an Average Online Storage Capacity in Excess of 30 Days
- Online Storage Retention Capability Drops Slowly as Growth Climbs -- Can be Extended Through Additional Disk Capacity
- An Archive Copy of Traffic is Made Daily by the Data Base Server of that Day's Traffic
- The Data Base Server is Sized to Handle Maximum of Approximately 50 MBytes per Day of Archive Material
- Abnormally Active Wires are Configured 1 Wire per Server

Declassified and Approved For Release 2012/05/31 : CIA-RDP88-00218R000300030001-0

Declassified and Approved For Release 2012/05/31 : CIA-RDP88-00218R000300030001-0

ESL
A Subsidiary of TRW

FBIS–WIRE SERVER COLLECTION OPERATION

TRW

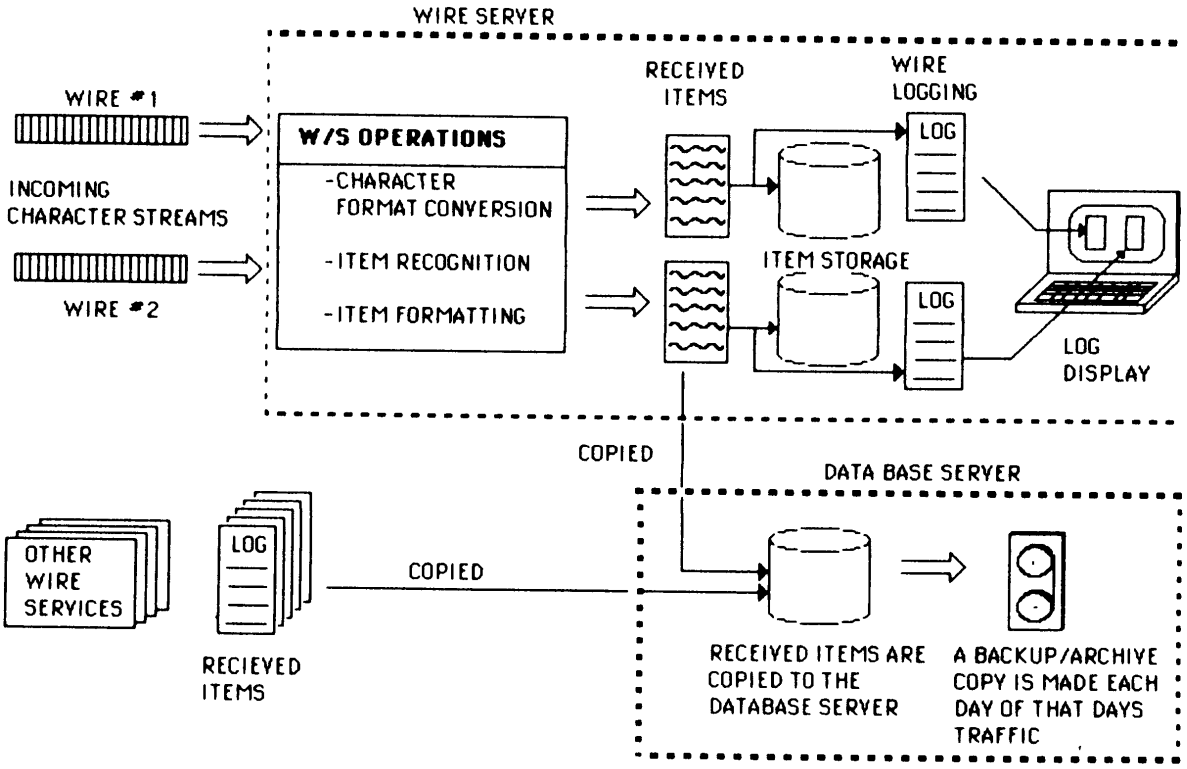

Declassified and Approved For Release 2012/05/31 : CIA-RDP88-00218R000300030001-0

Declassified and Approved For Release 2012/05/31 : CIA-RDP88-00218R000300030001-0

HARDWARE

- IBM PC AT, MODEL 99
- NETWORK INTERFACE
- TWO, TELECOMMUNICATION LINE CONTROLLERS
  - FIRST UNIT IS PRIME UNIT, ALWAYS IN USE
  - SECOND UNIT IS READY AS A STANDBY
- TWO, SERIAL INTERFACES
  - FIRST INTERFACE CONNECTS TO THE TLC
  - SECOND INTERFACE CONNECTS THE SERVER TO BACKUP CIRCUIT
- TWO SERVERS PER BUREAU, CROSS-COUPLED TO EACH CIRCUIT

SOFTWARE

- COMM SERVER EXECUTIVE PROGRAM
  - PROVIDES CHARACTER CONVERSION
  - PERFORMS MESSAGE AND MULTI-TAKE FORMATTING
  - LOGS EACH TRANSMISSION
  - UPDATES THE STATUS OF EACH ITEM IN SOURCE SUMMARY
  - STORES A COPY OF EACH TRANSMISSION IN THE DATA BASE SERVER FOR ARCHIVING

Declassified and Approved For Release 2012/05/31 : CIA-RDP88-00218R000300030001-0

Declassified and Approved For Release 2012/05/31 : CIA-RDP88-00218R000300030001-0

BUREAU:	ABIDJAN	AUSTRIAN	BANGKOK	GULF	HONG KONG
OUTPUT VOLUME: KWORDS/DAY	10.5	20.5	35.5	19.0	55.5
OUTPUT VOLUME: KBYTES/DAY	105	205	355	190	555
60 DAY ACCUMALATION: MBYTES	6.3	12.3	21.3	11.4	33.3

BUREAU:	JORDAN	KEY WEST	LONDON	NICOSIA	OKINAWA
OUTPUT VOLUME: KWORDS/DAY	13.5	7.5	90.0	26.0	47.5
OUTPUT VOLUME: KBYTES/DAY	135	75	900	260	475
60 DAY ACCUMALATION: MBYTES	8.1	4.5	54.0	15.6	28.5

BUREAU:	PANAMA	PARAGUAY	SEOUL	SWAZILAND	TEL AVIV
OUTPUT VOLUME: KWORDS/DAY	17.5	9.0	28.0	7.0	20.0
OUTPUT VOLUME: KBYTES/DAY	175	90	280	70	200
60 DAY ACCUMALATION: MBYTES	10.5	5.4	16.8	4.2	12.0

Declassified and Approved For Release 2012/05/31 : CIA-RDP88-00218R000300030001-0

Declassified and Approved For Release 2012/05/31 : CIA-RDP88-00218R000300030001-0

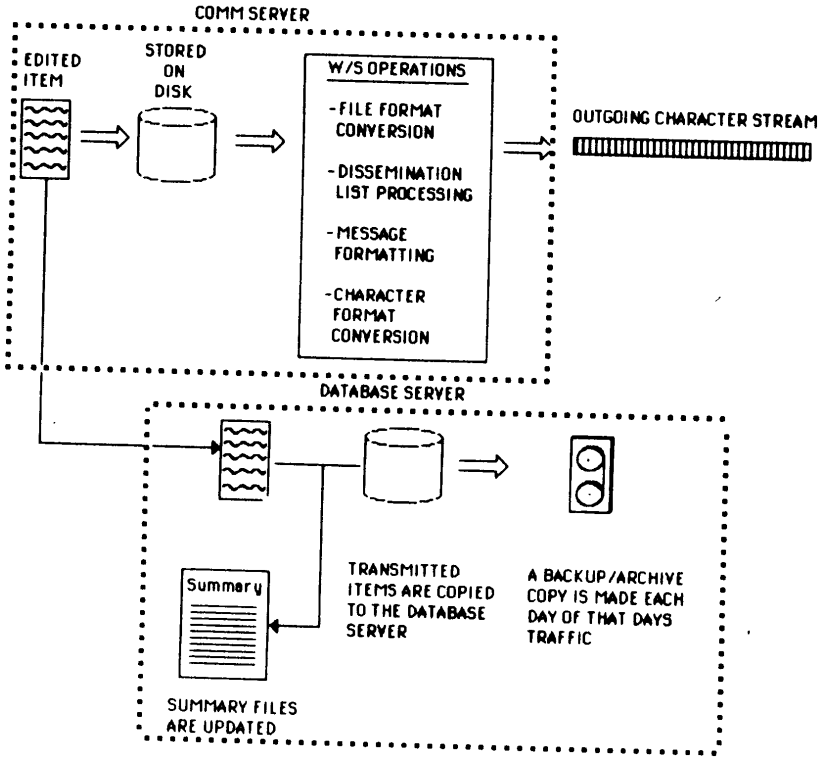

Declassified and Approved For Release 2012/05/31 : CIA-RDP88-00218R000300030001-0

Declassified and Approved For Release 2012/05/31 : CIA-RDP88-00218R000300030001-0

HARDWARE

- IBM PC AT, MODEL 99
- NETWORK INTERFACE
- ADDITIONAL 92 MBYTES DISK STORAGE
- DOUBLE-DUTY TAPE DRIVE: STREAMING OR START/STOP MODE
- SIZED TO HANDLE
  - MAXIMUM 50 MBYTES/DAY OF WIRE ARCHIVE TRAFFIC
  - THE MAXIMUM 54 MBYTES FROM 60 DAYS ACCUMALATION OF DISSEMINATED BUREAU ITEMS
  - ASSORTED MASTER VERSIONS OF SOURCE SUMMARIES, REFERENCE AIDS, BUREAU FILES

SOFTWARE

- PERFORMS ONLINE STORAGE MANAGEMENT AND DATA ACCESS
- ALSO RESPONSIBLE FOR OFFLINE STORAGE MANAGEMENT, ARCHIVING, AND ARCHIVE RETRIEVAL
- USER INTERFACE TO DATA BASE SERVER DATA BASES IS WITH 'RECORD KEEPER'

Declassified and Approved For Release 2012/05/31 : CIA-RDP88-00218R000300030001-0

Declassified and Approved For Release 2012/05/31 : CIA-RDP88-00218R000300030001-0

HARDWARE

- IBM PC AT, MODEL 99
- NETWORK INTERFACE

SOFTWARE

- XYWRITE II-PLUS FOR WORD PROCESSING
- "WORD PROOF" SPELLING CHECKER
- ASSORTED OFFICE AUTOMATION SOFTWARE PACKAGES
  - SYMPHONY, FOR SPREADSHEETS AND PERSONAL DATA BASES
  - PAYROLL
  - INVENTORY CONTROL
  - ACCOUNTS PAYABLE

Declassified and Approved For Release 2012/05/31 : CIA-RDP88-00218R000300030001-0

Declassified and Approved For Release 2012/05/31 : CIA-RDP88-00218R000300030001-0

- Xerox Ethernet Local Area Network
- Cable & IBM PC Ethernet Interface Cards Supplied by Xerox
- Network Runs XNS Protocols
- Coax Cable is Teflon Coated, Meets TEMPEST Specs
- Ethernet has a 10 MBit/sec Performance
- 10 MBits/sec Greatly Exceeds Bureau Performance Requirements:
  Permits 72 Simultaneous Users to Each Transmit
  Over 8 Typewritten Pages Every Second

Declassified and Approved For Release 2012/05/31 : CIA-RDP88-00218R000300030001-0

Declassified and Approved For Release 2012/05/31 : CIA-RDP88-00218R000300030001-0

MONITORING MAIN MENU

- ☐ NETWORK LOGON
- ☐ NETWORK LOGOFF
- ☐ TASK KEEPER
- ☐ RECORD KEEPER
- ☐ EDITOR (ENGLISH)
- ☐ EDITOR (FOREIGN LANGUAGE)
- ☐ REFERENCE AIDS
- ☐ MAIL
- ☐ PRINT
- ☐ D.O.S.

- FOR ACCOUNTING
- FOR ACCOUNTING
- MANAGES LIST OF MONITOR'S ASSIGNMENTS
- MANAGES FILE ACCOUNTING
- TRANSLATION
- DISPLAY OF FOREIGN LANGUAGE PRESS WIRES
- ACCESS REFERENCE MATERIALS
- SEND MAIL TO ANOTHER USER
- PRINT MATERIAL ON PRINT SENSOR
- EXECUTE O.S. COMMANDS

Declassified and Approved For Release 2012/05/31 : CIA-RDP88-00218R000300030001-0

Declassified and Approved For Release 2012/05/31 : CIA-RDP88-00218R000300030001-0

ESL
A Subsidiary of TRW

FBIS–MONITOR'S VIEW OF DATA RELATIONSHIPS

TRW

SOFTWARE: 'TASK KEEPER' 'RECORD KEEPER' WORD PROCESSOR(S)

DATA: TASK ASSIGNMENT LIST

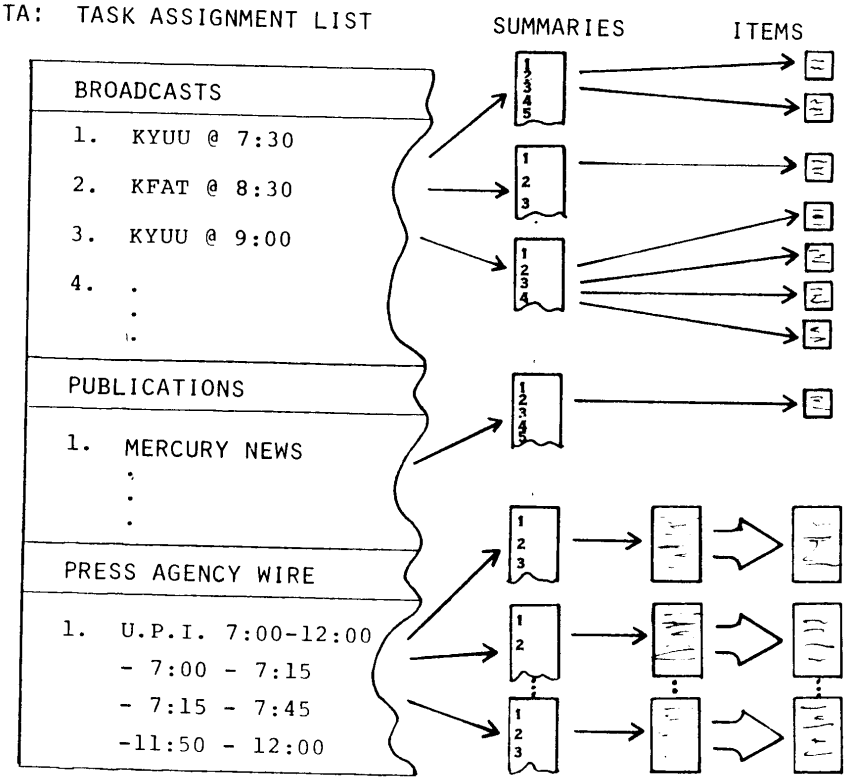

- MONITORS ARE ASSIGNED SPECIFIC SOURCES TO MONITOR (TASK ASSIGNMENT LIST)
- MONITORING OF EACH SOURCE PRODUCES A SUMMARY FOR SELECTION (PROGRAM SUMMARY, PRESS SELECTION LIST, PRESS AGENCY SUMMARY, ETC.)
- SELECTED MATERIAL IS TRANSLATED TO PRODUCE INDIVIDUAL ITEMS

Declassified and Approved For Release 2012/05/31 : CIA-RDP88-00218R000300030001-0

Declassified and Approved For Release 2012/05/31 : CIA-RDP88-00218R000300030001-0

FBIS–BROADCAST MONITORING (SELECTION)

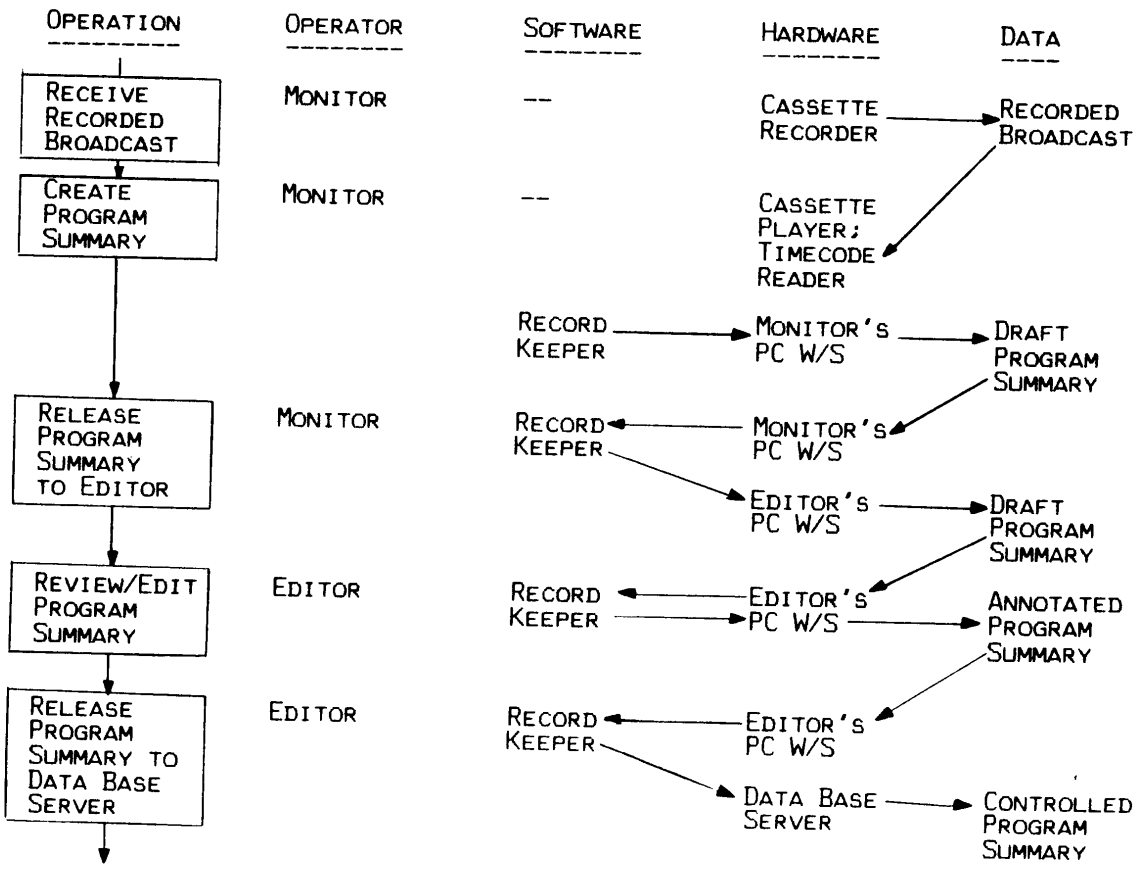

Declassified and Approved For Release 2012/05/31 : CIA-RDP88-00218R000300030001-0

Declassified and Approved For Release 2012/05/31 : CIA-RDP88-00218R000300030001-0

FBIS–BROADCAST MONITORING (TRANSLATION)

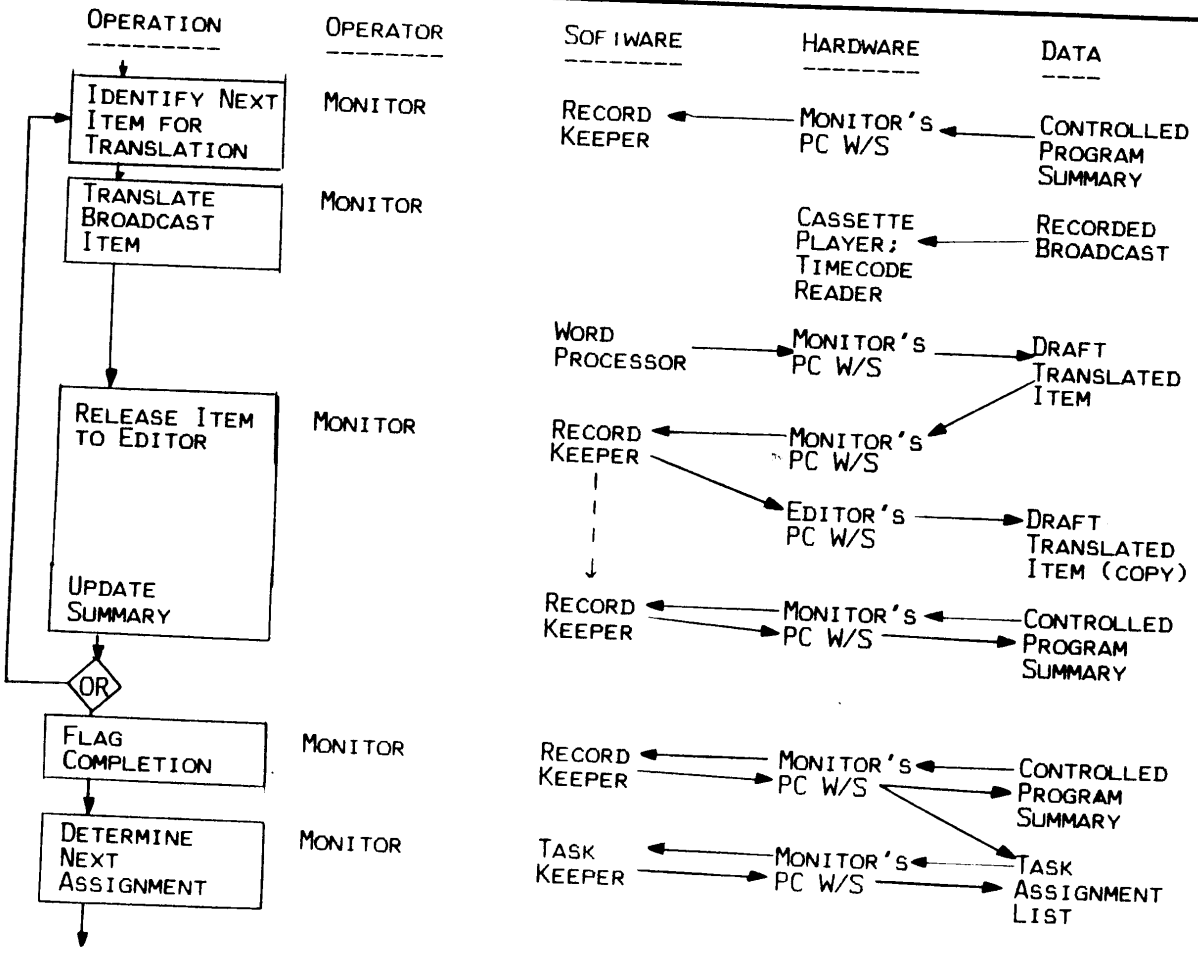

Declassified and Approved For Release 2012/05/31 : CIA-RDP88-00218R000300030001-0

Declassified and Approved For Release 2012/05/31 : CIA-RDP88-00218R000300030001-0

ESL
A Subsidiary of TRW

FBIS–WIRE SERVICE MONITORING (SELECTION)

TRW

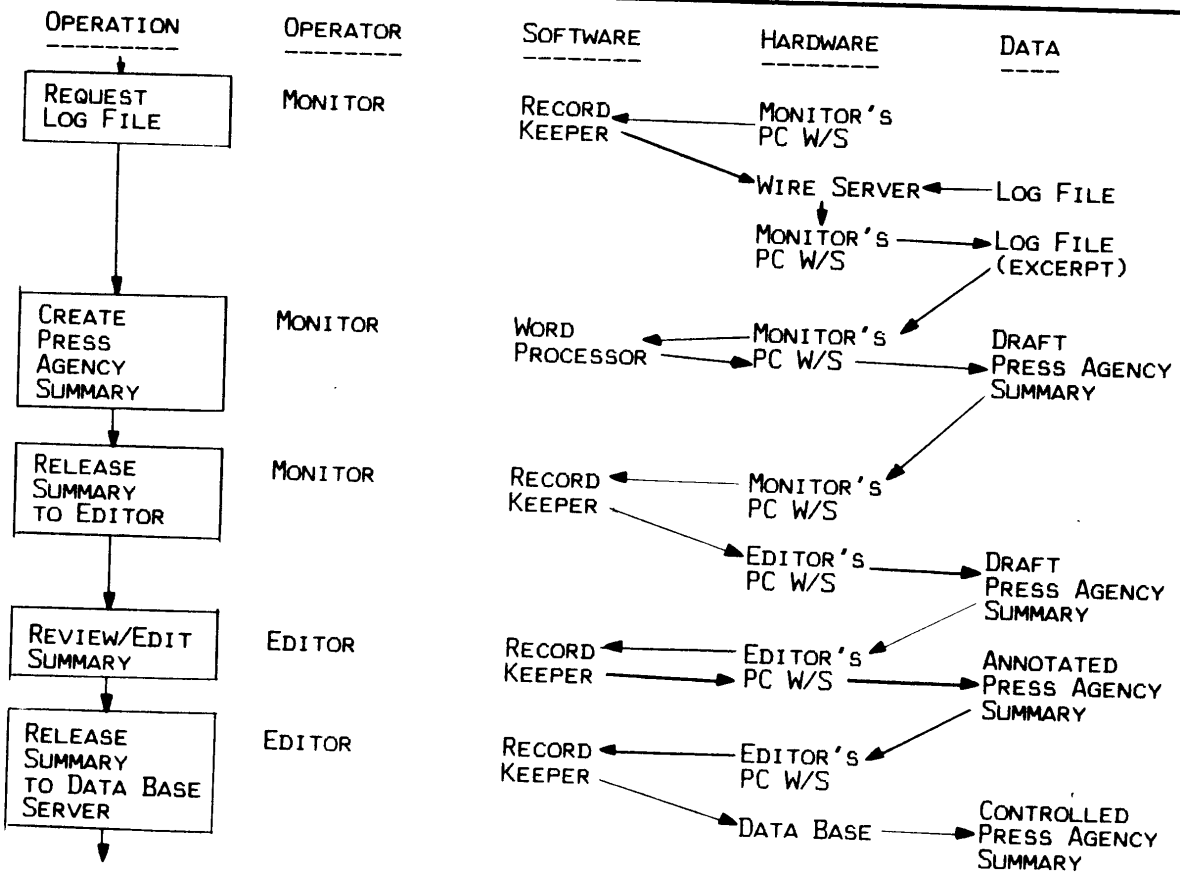

Declassified and Approved For Release 2012/05/31 : CIA-RDP88-00218R000300030001-0

Declassified and Approved For Release 2012/05/31 : CIA-RDP88-00218R000300030001-0

FBIS–WIRE SERVICE MONITORING (TRANSLATION)

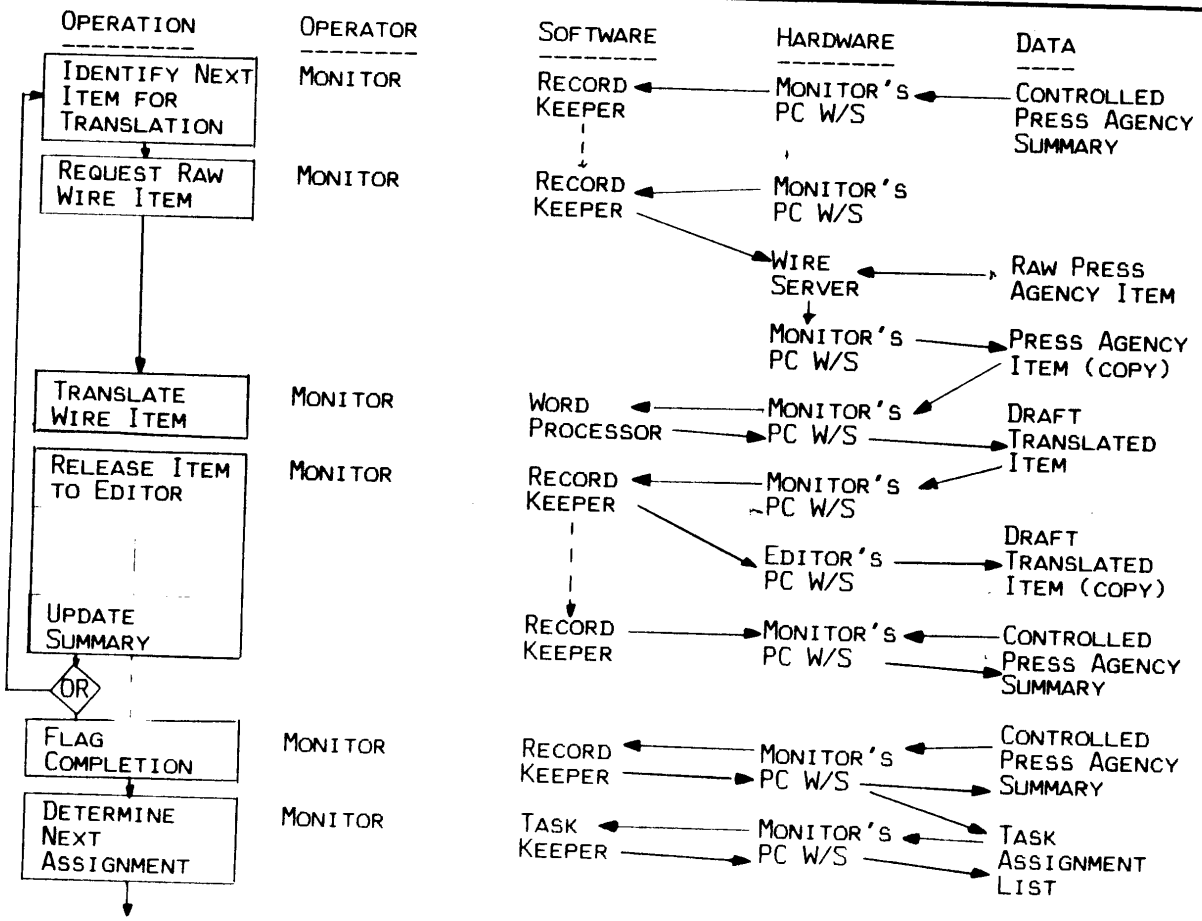

Declassified and Approved For Release 2012/05/31 : CIA-RDP88-00218R000300030001-0

Declassified and Approved For Release 2012/05/31 : CIA-RDP88-00218R000300030001-0

ESL
A Subsidiary of TRW

FBIS–PUBLICATIONS MONITORING (SELECTION)

TRW

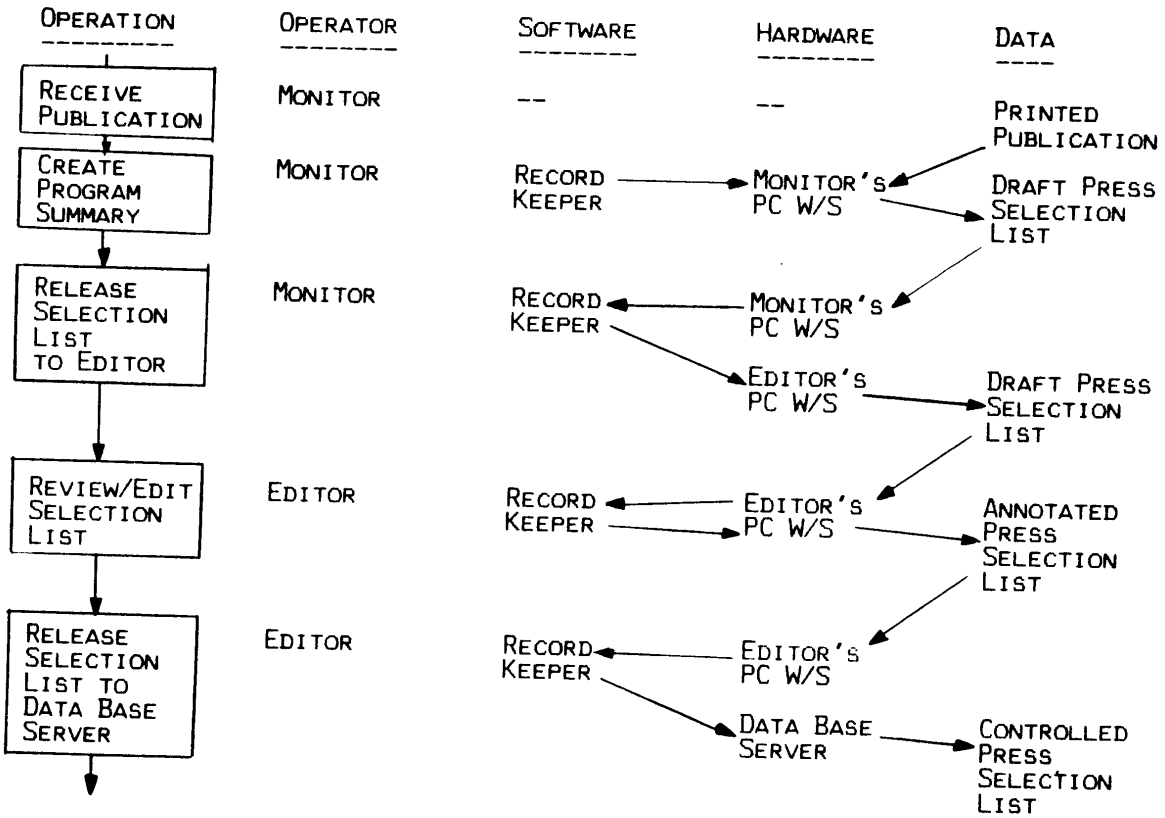

Declassified and Approved For Release 2012/05/31 : CIA-RDP88-00218R000300030001-0

Declassified and Approved For Release 2012/05/31 : CIA-RDP88-00218R000300030001-0

FBIS–PUBLICATIONS MONITORING (TRANSLATION)

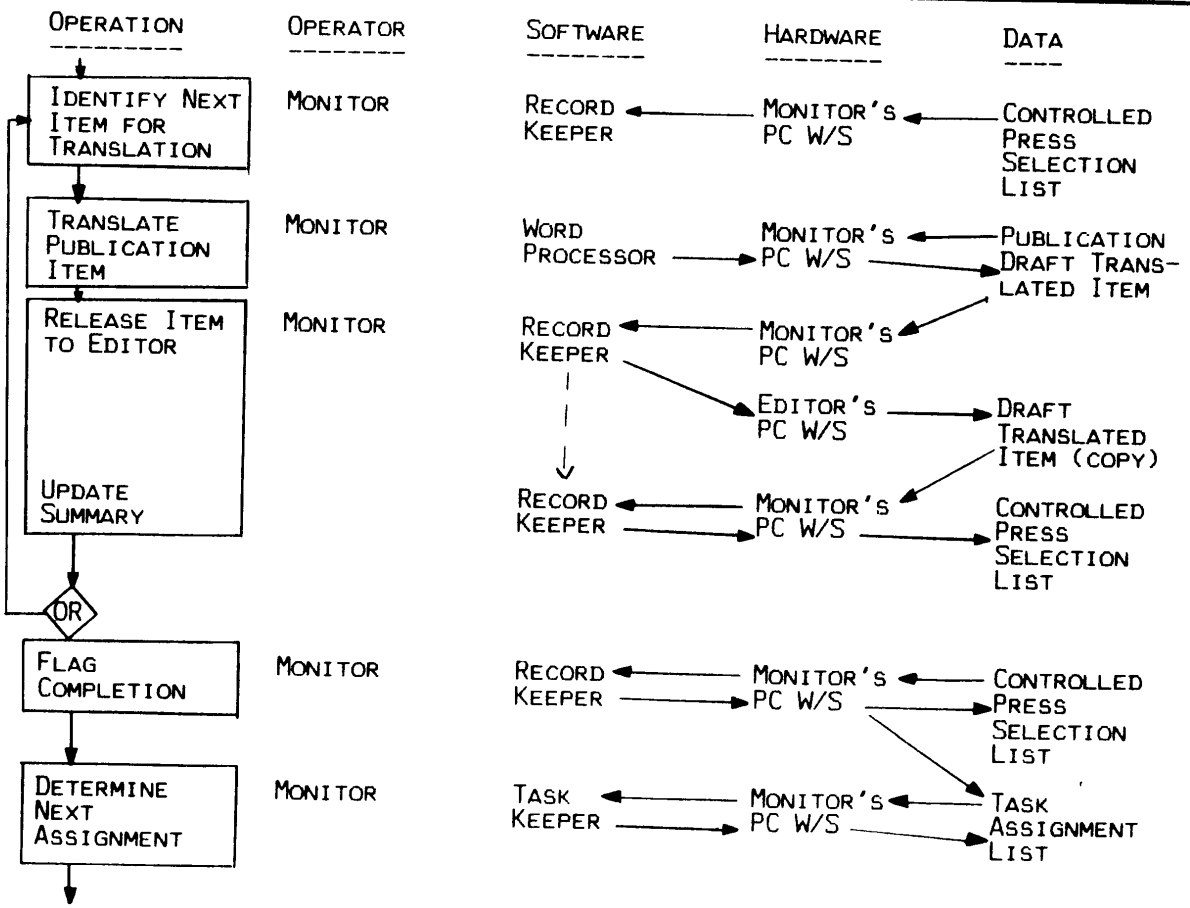

Declassified and Approved For Release 2012/05/31 : CIA-RDP88-00218R000300030001-0

Declassified and Approved For Release 2012/05/31 : CIA-RDP88-00218R000300030001-0

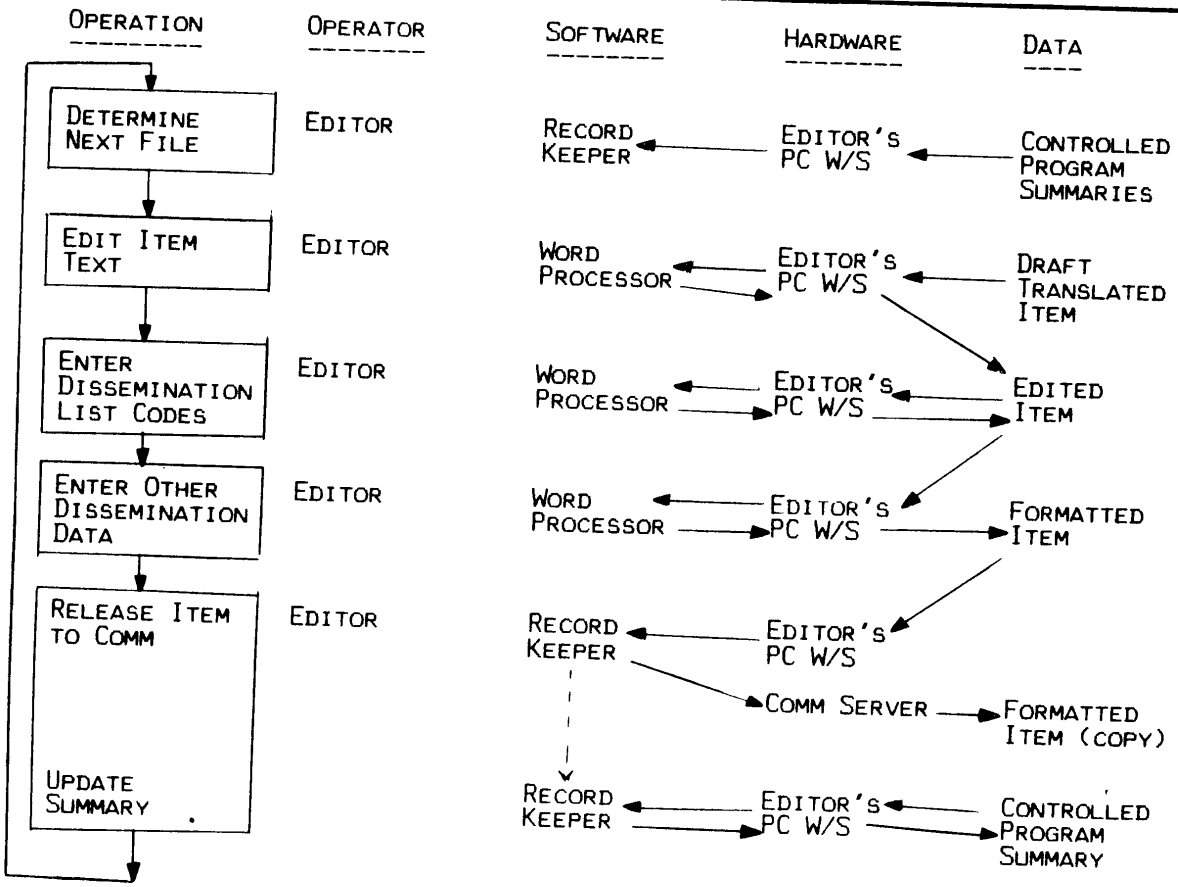

Declassified and Approved For Release 2012/05/31 : CIA-RDP88-00218R000300030001-0

Declassified and Approved For Release 2012/05/31 : CIA-RDP88-00218R000300030001-0

ESL
A Subsidiary of TRW

FBIS–COLLECTION SUBSYSTEM VENDOR LIST

TRW

QTY	PART NUMBER	DESCRIPTION	SOURCE
14	SUBCON	HF SWITCH MATRIX	OLEKTRON
365	WJ 9040	HF RECEIVER	WJ
		HEADSET	
13	SUBCON	VHF/UHF SWITCH MATRIX	OLEKTRON
53	WJ 8617B	VHF/UHF RECEIVER	WJ
39	PM 5560	TV TUNER	PHILLIPS
13	WJ 810	TIME/DATE CHARACTER GEN.	PANASONIC
68	5630	VIDEO CASSETTE RECORDER	SONY
13	1600	TV BASEBAND SWITCH	DYNAIR
13	CT 2000M	TV MONITOR	PANASONIC
14	8568A	SPECTRUM ANALYZER	HP
392	133B	AUDIO CASSETTE RECORDER	TASCAM
14	4 R/P-40	ARCHIVE TAPE RECORDER	MAGNASYNC/MOVIOLA
14	5300 SERIES	AUDIO DISTRIBUTION UNIT	DYNAIR
14	SYSTEM 21	MONITOR SWITCH MATRIX	DYNAIR
14	5370 SERIES	TIME CODE DISTRIBUTION	DYNAIR
14	8120	TIME CODE GENERATOR	AUSTRON
15	4833	RECORDER INTERFACE	ICS
33	PC-AT	CONTROLLER	IBM
392	8132	TIME CODE READER	AUSTRON

Declassified and Approved For Release 2012/05/31 : CIA-RDP88-00218R000300030001-0

Declassified and Approved For Release 2012/05/31 : CIA-RDP88-00218R000300030001-0

ESL
A Subsidiary of TRW

FBIS–BUREAU CONFIGURATION AND SIZING

TRW

ITEM DESCRIPTION	ABIDJA	AUSTR	BANKOK	HK	GULF	JORDAN	KEY W	NICOC	OKINA	PANAMA	PARAG	SEOUL	SWAZI	TEL AV	
HF COLLECTION															
HF SWITCH MATRIX	1	1	1	1	1	1	1	1	1	1	1	1	1	1	14
HF RECEIVER	12	32	41	13	12	21	8	21	72	47	20	24	15	13	351
TV COLLECTION															
VHF/UHF SWITCH MATRIX	0	1	1	1	1	1	1	1	1	1	1	1	1	1	13
VHF/UHF RECEIVER	0	4	2	5	2	2	4	2	4	4	3	2	3	2	39
TV TUNER	0	4	2	5	2	2	4	2	4	4	3	2	3	2	39
TIME/DATE GEN	0	1	1	1	1	1	1	1	1	1	1	1	1	1	13
VCR	0	8	2	10	2	4	8	2	8	8	6	2	6	2	68
TV SW	0	1	1	1	1	1	1	1	1	1	1	1	1	1	13
MONITOR	0	1	1	1	1	1	1	1	1	1	1	1	1	1	13
AUTOMATED CRUISING															
PRECONDITONER	1	1	1	1	1	1	1	1	1	1	1	1	1	1	14
HF RECEIVER	1	1	1	1	1	1	1	1	1	1	1	1	1	1	14
VHF/UHF RECEIVER	1	1	1	1	1	1	1	1	1	1	1	1	1	1	14
SPECTRUM ANALYZER	1	1	1	1	1	1	1	1	1	1	1	1	1	1	14
CASSETTE RECORDER	1	2	2	2	2	2	2	2	2	2	2	2	2	2	27
CONTROLLER	1	1	1	1	1	1	1	1	1	1	1	1	1	1	14
RECORDING															
AUDIO DISTRIBUTION	1	1	1	1	1	1	1	1	1	1	1	1	1	1	14
ARCHIVE RECORDER	1	1	1	1	1	1	1	1	1	1	1	1	1	1	14
MONITOR SW MATRIX	1	1	1	1	1	1	1	1	1	1	1	1	1	1	14
CASSETTE RECORDER	13	33	42	14	13	22	9	22	73	48	21	25	16	14	365
TIME CODE GENERATOR	1	1	1	1	1	1	1	1	1	1	1	1	1	1	14
TIME CODE DISTRIB	1	1	1	1	1	1	1	1	1	1	1	1	1	1	14
RECORDER INTERFACE	1	1	1	1	1	1	1	1	2	1	1	1	1	1	15
CONTROLLER															
COMPUTER	1	3	3	2	1	2	1	2	6	4	2	2	2	1	33

Declassified and Approved For Release 2012/05/31 : CIA-RDP88-00218R000300030001-0

Declassified and Approved For Release 2012/05/31 : CIA-RDP88-00218R000300030001-0

FBIS—"AVERAGE" COLLECTION SUB CONFIGURATION

Item Descriptions	Total # of Units	Average # of Units
HF Switch Matrix	14	1
HF Receiver	365	26
VHF/UHF Switch Matrix	13	1
VHF/UHF Receiver	53	4
TV Tuner	39	3
Time/Date Char. Gen.	13	1
Video Cassette Recorder	68	5
TV Baseband Switch	13	1
TV Monitor	13	1
Spectrum Analyzer	14	1
Audio Cassette Recorder	392	28
Archive Tape Recorder	14	1
Audio Distribution Unit	14	1
Monitor Switch Matrix	14	1
Time Code Distribution	14	1
Time Code Generator	14	1
Recorder Interface	15	1
Controller	33	2

Declassified and Approved For Release 2012/05/31 : CIA-RDP88-00218R000300030001-0

Declassified and Approved For Release 2012/05/31 : CIA-RDP88-00218R000300030001-0

ESL Bureau Item Description	Vendor	Vendor's Description
Monitors' w/s		
	IBM	5170-099: Enhanced PC AT, Model 99
	Xerox	EIB: Ethernet Interface Board & Software
	IBM	5170-4900: Monochrome Display/Pr. Adapter
	IBM	5151-001: Monochrome Display
	IBM	5150-1200: Enhanced Graphics Adapter
	ECI	Character Generator & Software
	IBM	5150-0235: 50' Cabling Segment
	IBM	5170-4211: DOS 3.1
	XYQuest	XyWrite II-Plus Word Processing Program
	IBM	5150-4017: Word Proof

Declassified and Approved For Release 2012/05/31 : CIA-RDP88-00218R000300030001-0

Declassified and Approved For Release 2012/05/31 : CIA-RDP88-00218R000300030001-0

ESL Bureau Item Description	Vendor	Vendor's Description
Editors' w/s		
	IBM	5170-099; Enhanced PC AT, Model 99
	Xerox	EIB; Ethernet Interface Board & Software
	IBM	5170-4900; Monochrome Display/Pr. Adapter
	IBM	5151-001; Monochrome Display
	IBM	5150-0235; 50' Cabling Segment
	IBM	5170-4211; DOS 3.1
	XYQuest	XyWrite II-Plus Word Processing Program
	IBM	5150-4017; Word Proof

Declassified and Approved For Release 2012/05/31 : CIA-RDP88-00218R000300030001-0

Declassified and Approved For Release 2012/05/31 : CIA-RDP88-00218R000300030001-0

ESL Bureau Item Description	Vendor	Vendor's Description
Admin. W/S		
	IBM	5170-099; Enhanced PC AT, Model 99
	Xerox	EIB; Ethernet Interface Board & Software
	IBM	5170-4900; Monochrome Display/Pr. Adapter
	IBM	5151-001; Monochrome Display
	IBM	5150-0235; 50' Cabling Segment
	IBM	5170-4211; DOS 3.1
	XYQuest	XyWrite II-Plus Word Processing Program
	IBM	5150-4017; Word Proof
	IBM	5150-9448; Symphony
	IBM	5150-4057; Inventory Control
	IBM	5150-4059; Accts. Payable
	IBM	5150-4060; Payroll

Declassified and Approved For Release 2012/05/31 : CIA-RDP88-00218R000300030001-0

Declassified and Approved For Release 2012/05/31 : CIA-RDP88-00218R000300030001-0

ESL Bureau Item Description	Vendor	Vendor's Description
Eng/Tech w/s		
	IBM	5170-099; Enhanced PC AT, Model 99
	Xerox	EIB; Ethernet Interface Board & Software
	IBM	5170-4900; Monochrome Display/Pr. Adapter
	IBM	5151-001; Monochrome Display
	IBM	5150-0235; 50' Cabling Segment
	IBM	5170-4211; DOS 3.1
	XYQuest	XyWrite II-Plus Word Processing Program
	IBM	5150-4017; Word Proof
	IBM	5150-4057; Inventory Control

Declassified and Approved For Release 2012/05/31 : CIA-RDP88-00218R000300030001-0

Declassified and Approved For Release 2012/05/31 : CIA-RDP88-00218R000300030001-0

ESL Bureau Item Description	Vendor	Vendor's Description
Workstations		
	Xerox	T22; Network Systems Processor
	Xerox	H87; 42 MB Rigid Disk Drive
	Xerox	D36; Keyboard with Mouse
	Xerox	D35; Large Format Display
	Xerox	G58; 1536 KB Memory for Workstations
	Xerox	D84; Standard Workstation Software
	Xerox	M34; Extended Language Option
	Xerox	M35; * Japanese Tableware
	Xerox	Mxx; * Chinese Tableware (est.)
	Xerox	Ethernet Transceiver
	Xerox	30' Drop Cable

Declassified and Approved For Release 2012/05/31 : CIA-RDP88-00218R000300030001-0

Declassified and Approved For Release 2012/05/31 : CIA-RDP88-00218R000300030001-0

ESL Bureau Item Description	Vendor	Vendor's Description
Wire Server		
	IBM	5170-099; Enhanced PC AT, Model 99
	IBM	5170-0205; 20 MB Fixed Disk
	Xerox	EIB; Ethernet Interface Board & Software
	IBM	5170-4900; Monochrome Display/Pr. Adapter
	IBM	5151-001; Monochrome Display
	IBM	5150-1200; Enhanced Graphics Adapter
	IBM	5170-0215; Serial/Parallel Adapter
	IBM	5170-0217; Serial Adapter Cable
	ECI	Character Generator & Software
	IBM	5150-0235; 50' Cabling Segment
	IBM	5170-4211; DOS 3.1

Declassified and Approved For Release 2012/05/31 : CIA-RDP88-00218R000300030001-0

Declassified and Approved For Release 2012/05/31 : CIA-RDP88-00218R000300030001-0

ESL Bureau Item Description	Vendor	Vendor's Description
Comm Server		
	IBM	5170-099; Enhanced PC AT, Model 99
	Xerox	EIB; Ethernet Interface Board & Software
	IBM	5170-4900; Monochrome Display/Pr. Adapter
	IBM	5151-001; Monochrome Display
	Analytic	TLC-100; Telecommunications Line Contr.
	IBM	5170-0215; Serial/Parallel Adapter
	IBM	5170-0217; Serial Adapter Cable
	IBM	5150-0235; 50' Cabling Segment
	IBM	5170-4211; DOS 3.1

Declassified and Approved For Release 2012/05/31 : CIA-RDP88-00218R000300030001-0

Declassified and Approved For Release 2012/05/31 : CIA-RDP88-00218R000300030001-0

ESL Bureau Item Description	Vendor	Vendor's Description
Print Server		
	Xerox	T22; Network Systems Processor
	Xerox	H87; 42 MB Rigid Disk Drive
	Xerox	T23; Display/Keyboard Server Monitor
	Xerox	909; Electronic Printer
	Xerox	H74; Standard Services Software
	Xerox	H73; Print Services Software
	Xerox	F01; Classic Font Software
	Xerox	F04; Modern Font Software
	Xerox	M37; * Japanese Classic Fonts
	Xerox	Mxx; * Chinese Classic Fonts (est.)
	Xerox	Ethernet Transceiver
	Xerox	30' Drop Cable

Declassified and Approved For Release 2012/05/31 : CIA-RDP88-00218R000300030001-0

Declassified and Approved For Release 2012/05/31 : CIA-RDP88-00218R000300030001-0

ESL Bureau Item Description	Vendor	Vendor's Description
File Server		
	IBM	5170-099; Enhanced PC AT, Model 99
	Sunol	UMS; 92 MB Fixed Disk
	Sunol	Disk Interface
	IDT	TD-1012; Streaming Tape Drive
	Xerox	EIB; Ethernet Interface Board & Software
	IBM	5170-4900; Monochrome Display/Pr. Adapter
	IBM	5151-001; Monochrome Display
	IBM	5150-0235; 50' Cabling Segment
	IBM	5170-4211; DOS 3.1

Declassified and Approved For Release 2012/05/31 : CIA-RDP88-00218R000300030001-0

Declassified and Approved For Release 2012/05/31 : CIA-RDP88-00218R000300030001-0

ESL
A Subsidiary of TRW

FBIS–LAN NETWORK COMPONENTS

TRW

ESL Bureau Item Description	Vendor	Vendor's Description
LAN		
	Xerox	1,000' Ethernet Network Cable
	Xerox	Network Terminators (2 Needed)

Declassified and Approved For Release 2012/05/31 : CIA-RDP88-00218R000300030001-0

Declassified and Approved For Release 2012/05/31 : CIA-RDP88-00218R000300030001-0

ESL
A Subsidiary of TRW

FBIS–IP/S CONFIGURATION(1 OF 3)

TRW

BUREAU: / ITEM DESCRIPTIONS	ABIDJAN	AUSTRIAN	BANGKOK	GULF	HONG KONG	JORDAN
LAN NETWORK:						
LAN	1	1	1	1	1	1
NETWORK SERVERS:						
PRINT SERVER	2	2	2	2	2	2
WIRE SERVER	4	4	5	3	2	4
COMM SERVER	2	2	2	2	2	2
FILE SERVER	3	3	3	3	3	3
PC WORKSTATIONS:						
MONITORS' W/S	10	26	23	12	26	8
EDITORS' W/S	2	4	5	2	5	2
ADMIN. W/S	2	3	4	2	3	3
ENG/TECH W/S	1	1	1	1	1	1
	15	34	33	17	35	14
MULTI-LINGUAL W/S:						
WORKSTATIONS	1	2	2	1	3	1

Declassified and Approved For Release 2012/05/31 : CIA-RDP88-00218R000300030001-0

Declassified and Approved For Release 2012/05/31 : CIA-RDP88-00218R000300030001-0

BUREAU:	KEY WEST	LONDON	PMU	NICOSIA	OKINAWA	PANAMA
ITEM DESCRIPTIONS						
LAN NETWORK:						
LAN	1	1	0	1	1	1
NETWORK SERVERS:						
PRINT SERVER	2	3	0	2	2	2
WIRE SERVER	2	0	0	2	9	4
COMM SERVER	2	2	0	2	2	2
FILE SERVER	3	3	0	3	3	3
PC WORKSTATIONS:						
MONITORS' W/S	5	5	17	14	27	14
EDITORS' W/S	0	10	5	3	8	4
ADMIN. W/S	2	6	1	2	8	4
ENG/TECH W/S	1	1	0	1	1	1
	8	22	23	20	44	23
MULTI-LINGUAL W/S:						
WORKSTATIONS	1	1	2	1	3	1

Declassified and Approved For Release 2012/05/31 : CIA-RDP88-00218R000300030001-0

Declassified and Approved For Release 2012/05/31 : CIA-RDP88-00218R000300030001-0

FBIS–IP/S CONFIGURATION (3 OF 3)

BUREAU: / ITEM DESCRIPTIONS	PARAGUAY	SEOUL	SWAZILAND	TEL AVIV
LAN NETWORK:				
LAN	1	1	1	1
NETWORK SERVERS:				
PRINT SERVER	2	2	2	2
WIRE SERVER	3	2	1	2
COMM SERVER	2	2	2	2
FILE SERVER	3	3	3	3
PC WORKSTATIONS:				
MONITORS' W/S	11	13	8	11
EDITORS' W/S	2	2	2	2
ADMIN. W/S	2	2	2	3
ENG/TECH W/S	1	1	1	1
	16	18	13	17
MULTI-LINGUAL W/S:				
WORKSTATIONS	1	1	1	1

Declassified and Approved For Release 2012/05/31 : CIA-RDP88-00218R000300030001-0

Declassified and Approved For Release 2012/05/31 : CIA-RDP88-00218R000300030001-0

FBIS—"AVERAGE" BUREAU IP/S CONFIGURATION

ITEM DESCRIPTIONS	TOTAL # OF UNITS	AVERAGE # OF UNITS
LAN NETWORK:		
LAN	15	1
NETWORK SERVERS:		
PRINT SERVER	31	2
WIRE SERVER	47	3
COMM SERVER	30	2
FILE SERVER	45	3
PC WORKSTATIONS:		
MONITORS' W/S	230	14
EDITORS' W/S	58	4
ADMIN. W/S	49	3
ENG/TECH W/S	15	1
	352	22
MULTI-LINGUAL W/S:		
WORKSTATIONS	23	1

NOTE: PANAMA AND LONDON (MINUS PMU TERMINALS) BUREAUS APPROXIMATE THE AVERAGE-SIZED CONFIGURATION

Declassified and Approved For Release 2012/05/31 : CIA-RDP88-00218R000300030001-0

Declassified and Approved For Release 2012/05/31 : CIA-RDP88-00218R000300030001-0

FBIS–COLLECTION SUBSYSTEM SOFTWARE EFFORT

SOFTWARE DESCRIPTION	ESTIMATED LOC
0 CRUISING	
- OPERATOR INTERFACE	250
- DEVICE CONTROL	1,000
- LOGGING	500
- GRAPHICS PRESENTATIONS	1,000
	2,750
0 COLLECTION	
- OPERATOR INTERFACE	250
- SCHEDULER	500
- RESOURCE ALLOCATION	250
- HARDWARE CONTROL	1,500
	2,500

Declassified and Approved For Release 2012/05/31 : CIA-RDP88-00218R000300030001-0

Declassified and Approved For Release 2012/05/31 : CIA-RDP88-00218R000300030001-0

SOFTWARE DESCRIPTION	ESTIMATED LOC
0 WIRE PROCESSING	
- OPERATOR INTERFACE	250
- LINE INTERFACE	250
- CHARACTER FORMAT CONVERSION	500
- ITEM RECEPTION	250
- FILE STORAGE	500
- WIRE RECEIPT LOGGING	500
* PRODUCE VARIATIONS FOR EACH OF 84 WIRES (1,000 * 84 * AVERAGE 5% MODIFICATION)	4,200
	6,450
0 COMM. PROCESSING	
- OPERATOR INTERFACE	250
- FILE FORMAT CONVERSION	750
- DISSEMINATION LIST PROCESSING	500
- MESSAGE FORMATTING	1,000
- CHARACTER FORMAT CONVERSION	1,000
- LINE INTERFACE	250
- FILE STORAGE	500
- COMMUNICATIONS LOGGING	750
- INTERNAL DISSEMINATION	500
- DIGITAL FILE FORMAT CONVERSION	250
- PRODUCE VARIATIONS FOR EACH OF 4 PROTOCOLS (2,250 * 4 * AVERAGE 15% MODIFICATION)	1,350
	7,100

Declassified and Approved For Release 2012/05/31 : CIA-RDP88-00218R000300030001-0

Declassified and Approved For Release 2012/05/31 : CIA-RDP88-00218R000300030001-0

FBIS–PROCESSING SUBSYSTEM SOFTWARE EFFORT

SOFTWARE DESCRIPTION	ESTIMATED LOC
O DATA BASE SERVICES	
– STORAGE MANAGEMENT	2,500
– ARCHIVE MANAGEMENT	750
– USER INTERFACE ('RECORD KEEPER')	1,000
	4,250
O PRINT SERVICES	
– WORD PROCESSOR FILE FORMAT CONVERSION	750
– MULTILINGUAL FILE FORMAT CONVERSION	1,250
	2,000
O TEXT PROCESSING	
– EDIT/TRACE ENHANCEMENTS TO XYWRITE	1,000
– MODIFICATIONS TO ECI SOFTWARE	250
– MENU	500
	1,750
O ADMIN/AUTOMATION	
– PERSONNEL/COVERAGE SCHEDULING	1,500
– USER INTERFACE ('TASK KEEPER')	500
	2,000

Declassified and Approved For Release 2012/05/31 : CIA-RDP88-00218R000300030001-0

Declassified and Approved For Release 2012/05/31 : CIA-RDP88-00218R000300030001-0

FBIS–TOTAL SOFTWARE EFFORT

SOFTWARE DESCRIPTION	ESTIMATED LOC
0 CRUISING	2,750
0 COLLECTION	2,500
0 WIRE PROCESSING	6,450
0 COMM. PROCESSING	7,100
0 DATA BASE SERVICES	4,250
0 PRINT SERVICES	2,000
0 TEXT PROCESSING	1,750
0 ADMIN/AUTOMATION	2,000
	28,800

Declassified and Approved For Release 2012/05/31 : CIA-RDP88-00218R000300030001-0

Declassified and Approved For Release 2012/05/31 : CIA-RDP88-00218R000300030001-0

FBIS–IP/S ARCHITECTURE TRADES SUMMARY

NO-HOST	DUAL-HOST	DC-HOST
+ PERMITS INTEGRATED MULTILINGUAL CAPABILITIES	– MULTILINGUAL CAPABILITIES RESTRICTED	– MULTILINGUAL CAPABILITIES RESTRICTED
+ BUILT-IN REDUNDANCY	+ NON-STOP OPERATION	– RELIES ON COMM LINK
+ LOW RISK	+ NO RISK FOR MANY FUNCTIONS	+ NO RISK FOR MANY FUNCTIONS
+ LOWEST COST	– RELATIVELY EXPENSIVE	– EXPENSIVE COMM COSTS
+ SIMPLE TO MAINTAIN	– REQUIRES SKILLED TECHNICIAL	+ SIMPLE TO REPAIR
+ MINIMAL FACILITIES REQUIRED	– REQUIRES COMPUTER ROOM	+ LEAST FACILITIES REQUIRED
+ OFFICE AUTOMATION SOFTWARE AVAILABLE	– LIMITED OFFICE SOFTWARE AVAILABLE	– LIMITED OFFICE SOFTWARE AVAILABLE
– REQUIRES EDIT/TRACE DEVELOPMENT	+ EDIT/TRACE AVAILABLE	+ EDIT/TRACE AVAILABLE
– DIFFERENT EDITORIAL SYSTEM THAN D.C.	+ SAME AS IN D.C.	+ SAME AS IN D.C.
– REQUIRES MOST DEVELOPMENT EFFORT	– ISSUES WITH VENDOR ON SOFTWARE INTEGRATION	– ISSUES WITH VENDOR ON SOFTWARE INTEGRATION

Declassified and Approved For Release 2012/05/31 : CIA-RDP88-00218R000300030001-0

Declassified and Approved For Release 2012/05/31 : CIA-RDP88-00218R000300030001-0

ESL
A Subsidiary of TRW

FBIS–RECORDING METHODS COMPARISON

TRW

DIGITAL		MAGNETIC
+ Electronic Distribution Made Directly to Each Monitor		+ Electronic Distribution Made Directly to Each Monitor
- Distribution Must be Made at Broadcast Time to a Monitor	*	+ Permits Boardman to Make Recordings
- Not Practical to Transfer Recordings Between Monitors	*	+ Allows Flexibility in the Assignment of Translations
+ Possible to Simultaneously Both Record and Playback		- Requires Two Recorders for This
- 20 MB Disk Filled in 20 Mins.		+ Can Record Lengthy Broadcasts
- Requires Significant Management of Disk Space by Monitor		- Monitor Manages His Set of Daily Cassettes
+ Permits Automatic Time Stamping		+ Time Code (& Reader) Provided
+ Allows Integration of Time Codes Into Word Processor		- Monitor Types in Information
- Somewhat Higher Equipment Costs		+ Range of Cost Options Available
- Implementation Poses Performance Risks	*	+ No Risk
- Necessitates Collection Software at Monitor's PC Workstation		- Operator Must Change Tapes

* = Deciding Factors

Declassified and Approved For Release 2012/05/31 : CIA-RDP88-00218R000300030001-0

Declassified and Approved For Release 2012/05/31 : CIA-RDP88-00218R000300030001-0

FBIS – PERSONAL DIGITAL RECORDING SCHEME

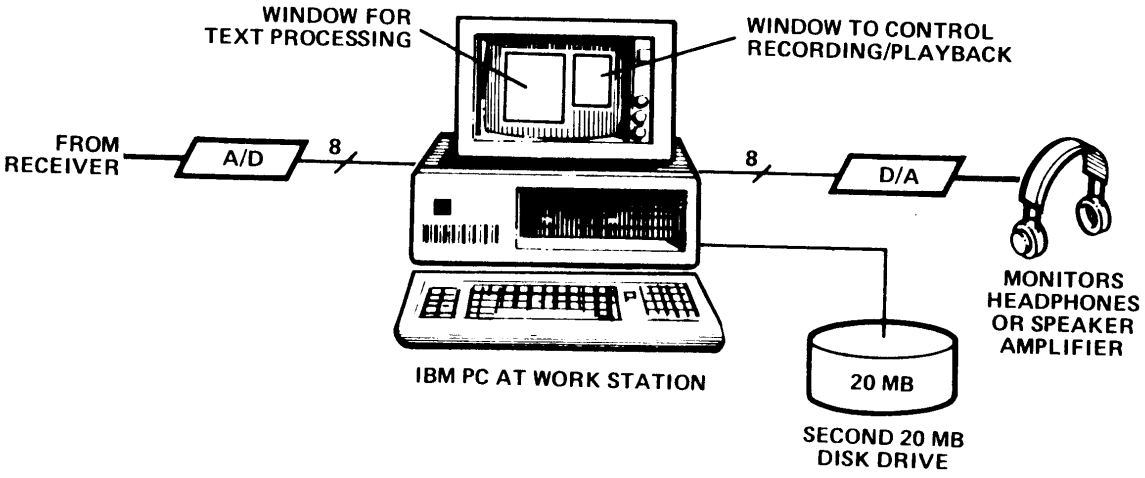

SV00007-9

Declassified and Approved For Release 2012/05/31 : CIA-RDP88-00218R000300030001-0

Declassified and Approved For Release 2012/05/31 : CIA-RDP88-00218R000300030001-0

- Performance Risks:
  - Compatibility of ECI Foreign Language Storage Formats with Xerox Acceptable Print Formats
  - Ability to Convert Foreign Language Wire Character Formats Compatible with ECI Storage Formats, for all Languages
- Cost Risks:
  - Edit/Trace Availability in an Elegant Form
  - Ease of Integration of Software from Various Vendors

Declassified and Approved For Release 2012/05/31 : CIA-RDP88-00218R000300030001-0

Declassified and Approved For Release 2012/05/31 : CIA-RDP88-00218R000300030001-0

FBIS–OPEN DESIGN ISSUES

- Impact of TBD Removals
- Useability of GFE Equipment
  - Need for Replacement Due to Age or Maintainability
  - Need for "Extra" Equipment, Such as Speakers & Headphones
  - Equipment Differences from Bureau to Bureau
- Validity of Assumptions
  - Collection & Processing Equipment Configurations
  - RS-232-Like Protocols for Press Agency Wires

Declassified and Approved For Release 2012/05/31 : CIA-RDP88-00218R000300030001-0

Declassified and Approved For Release 2012/05/31 : CIA-RDP88-00218R000300030001-0

FBIS–OPEN OPERATIONAL ISSUES

- Who Will Function as a 'Boardman' in Bureaus Currently Without One:
  - Need to Monitor Collection Operation, Even if Receivers & Recorders are Situated with Monitors
  - Need to Set up Collection Schedule in Controller
- Which Bureau Personnel are Best Suited to be Assigned the Duties of System Administrator:
  - Defining Users & Controlling Network Security
  - Managing Network Configuration
- Which Personnel Should be Responsible for System Operation:
  - Perform Backup, Archive, and Archive Retrieval Functions
  - Manage Disk Space
  - Restore Operation After Hardware Failure
  - Be Available on each Operational Shift

Declassified and Approved For Release 2012/05/31 : CIA-RDP88-00218R000300030001-0

Declassified and Approved For Release 2012/05/31 : CIA-RDP88-00218R000300030001-0

THE ESL DESIGN PROVIDES FOR SIGNIFICANT IMPROVEMENTS IN ALL BUREAU OPERATIONS

- O TOTALLY AUTOMATIC SPECTRUM SEARCH AND OBSERVANCE RECORDING ALLOW CRUISER TO PERFORM THOROUGH SEARCHES
- O AUTOMATED BROADCAST COLLECTION AND ARCHIVE TO STREAMLINE BOARDMAN/MONITORS' ACTIVITIES
- O COLLECTION OF WIRE SERVICES IN SOFTCOPY PROVIDES:
  - AUTOMATED LOGGING OF PRESS AGENCY ITEM RECEIPTS
  - DIRECT FILING OF ITEMS FROM ENGLISH-LANGUAGE SOURCES
- O SOFTCOPY MONITORS' & EDITORS' WORKSTATIONS EXPEDITE THE FLOW OF BUREAU TRAFFIC
  - FASTER, EASIER TYPING OF TRANSLATIONS
  - ELIMINATES PAPER HANDLING AND ASSOCIATED DELAYS
- O AUTOMATED COMMUNICATIONS ELIMINATE NEED TO RE-KEY TRANSMITTED ITEMS AND SPEEDS UP DISSEMINATION
- O MULTI-LINGUAL AND ONLINE REFERENCE AIDS SUPPORT MONITORS' TRANSLATION ACTIVITIES
- O OFFICE AUTOMATION SUPPORT REDUCES THE EFFORT TO PERFORM BUREAU ADMINISTRATION AND PROVIDES BETTER MANAGEMENT INFORMATION
- O DATA BASE SERVICES MANAGE THE COLLECTION OF DATA INPUT AND PRODUCED BY EACH BUREAU

Declassified and Approved For Release 2012/05/31 : CIA-RDP88-00218R000300030001-0

Declassified and Approved For Release 2012/05/31 : CIA-RDP88-00218R000300030001-0

THE DESIGN CONCEPT PHASE HAS DEMONSTRATED THAT THE FBIS MODERNIZATION REQUIREMENTS CAN BE REALIZED

- Conceptual Design Proves the Feasibility of Approach
- Design Provides Comprehensive Procurement Cost Estimates
- The Conceptual Design Esatablishes a Firm Foundation for the Detailed Design Process and Cost/Benefit Tradeoffs
- Implementation of the Design is Achievable with Low Risks
- Design is Very Operable -- Very Low Operational Risks
- Design is Also Maintainable: Employs Proven Technologies, Redundancy, and Simple Restoration Procedures

Declassified and Approved For Release 2012/05/31 : CIA-RDP88-00218R000300030001-0

Declassified and Approved For Release 2012/05/31 : CIA-RDP88-00218R000300030001-0

5. HEADQUARTERS DESIGN AND OPS CONCEPT

Declassified and Approved For Release 2012/05/31 : CIA-RDP88-00218R000300030001-0

Declassified and Approved For Release 2012/05/31 : CIA-RDP88-00218R000300030001-0

- OVERALL DESIGN
- DAILY OPERATIONS SUBSYSTEM
- TRANSLATION SERVICES SUBSYSTEM
- ANALYTICAL SERVICES SUBSYSTEM
- DESIGN SUMMARY
- OPERATIONS CONCEPT
- SUMMARY

Declassified and Approved For Release 2012/05/31 : CIA-RDP88-00218R000300030001-0

Declassified and Approved For Release 2012/05/31 : CIA-RDP88-00218R000300030001-0

---->
- OVERALL DESIGN
  - PROCESS
  - ARCHITECTURE
  - INTERFACE
  - TRADEOFFS
- DAILY OPERATIONS SUBSYSTEM
- TRANSLATION SERVICES SUBSYSTEM
- ANALYTICAL SERVICES SUBSYSTEM
- DESIGN SUMMARY
- OPERATIONS CONCEPT
- SUMMARY

Declassified and Approved For Release 2012/05/31 : CIA-RDP88-00218R000300030001-0

Declassified and Approved For Release 2012/05/31 : CIA-RDP88-00218R000300030001-0

FBIS–DESIGN PROCESS

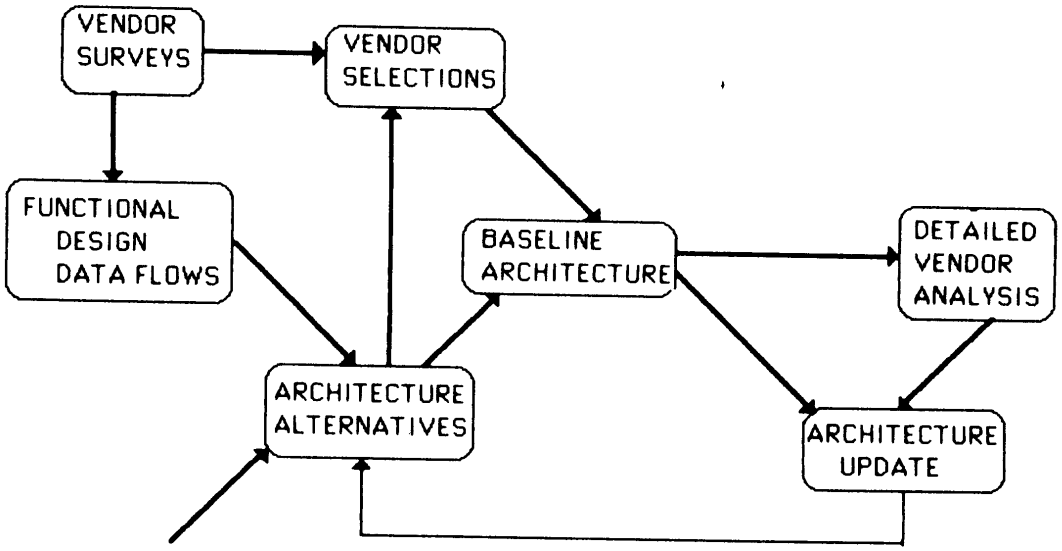

Declassified and Approved For Release 2012/05/31 : CIA-RDP88-00218R000300030001-0

Declassified and Approved For Release 2012/05/31 : CIA-RDP88-00218R000300030001-0

FBIS–GENERIC FUNCTIONAL STRUCTURE

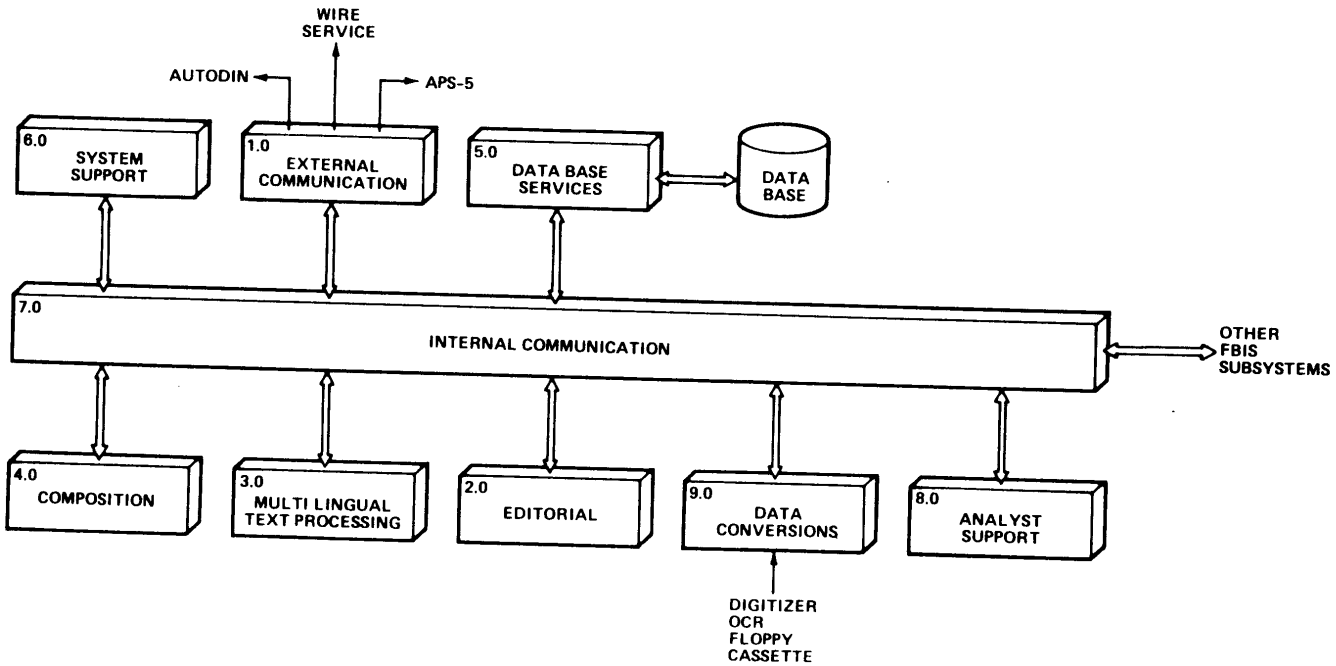

Declassified and Approved For Release 2012/05/31 : CIA-RDP88-00218R000300030001-0

Declassified and Approved For Release 2012/05/31 : CIA-RDP88-00218R000300030001-0

ESL
A Subsidiary of TRW

FBIS–SUBSYSTEM FUNCTIONAL ALLOCATION

TRW

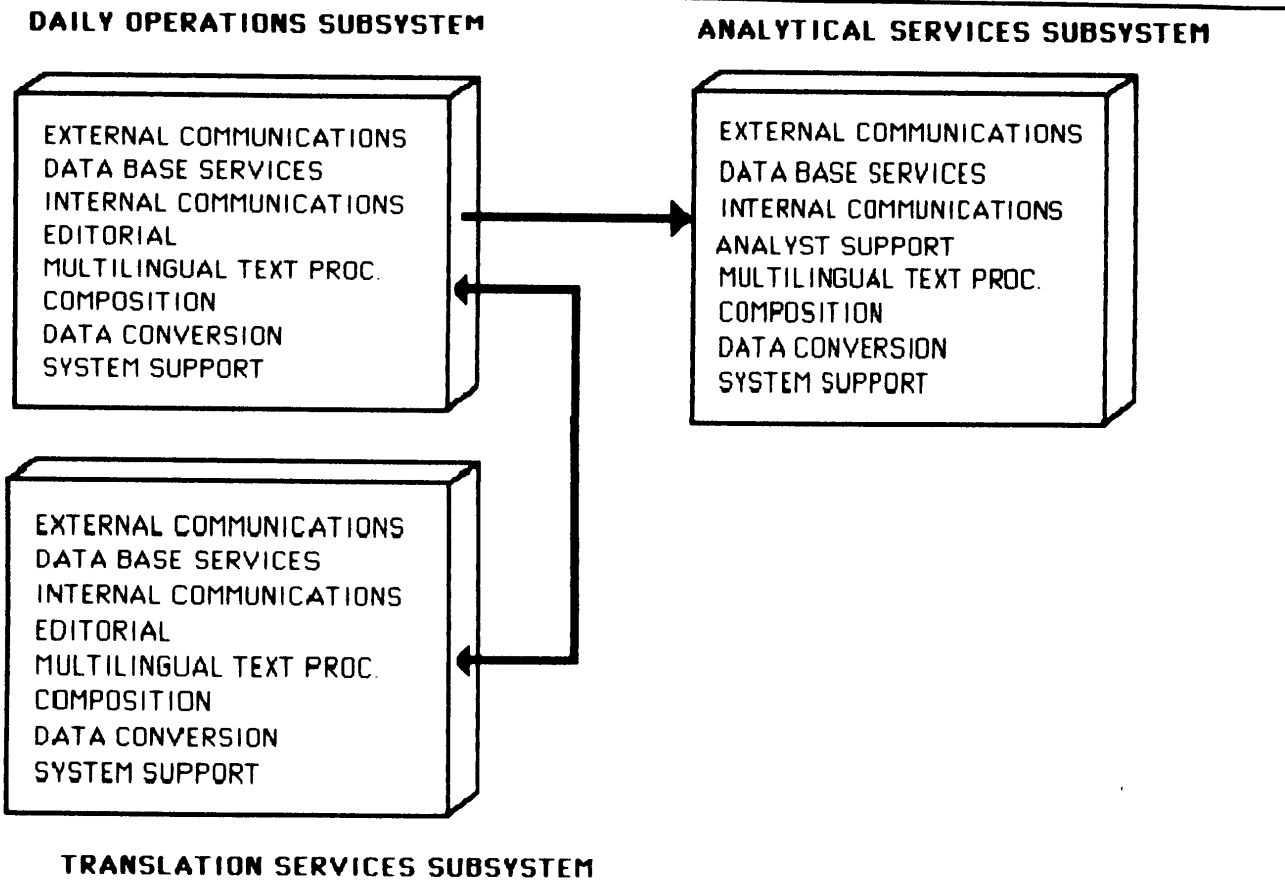

Declassified and Approved For Release 2012/05/31 : CIA-RDP88-00218R000300030001-0

Declassified and Approved For Release 2012/05/31 : CIA-RDP88-00218R000300030001-0

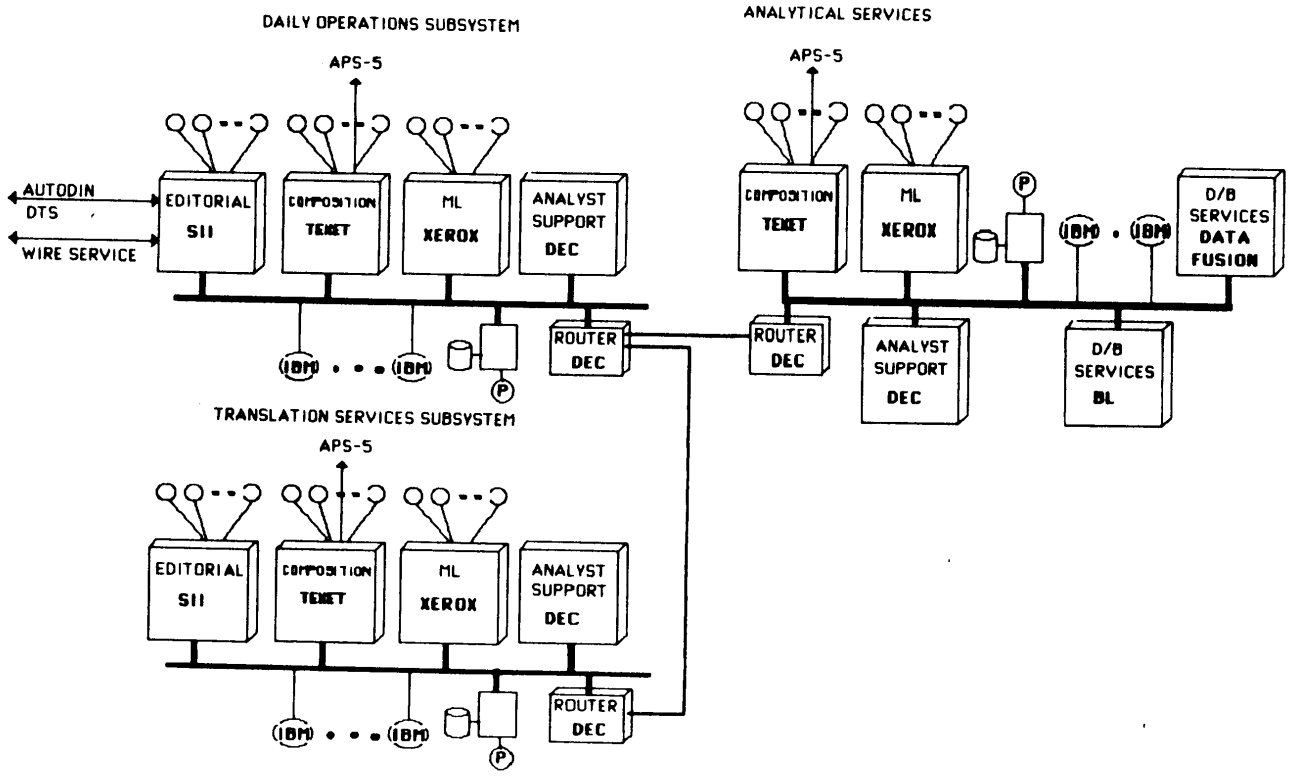

Declassified and Approved For Release 2012/05/31 : CIA-RDP88-00218R000300030001-0

Declassified and Approved For Release 2012/05/31 : CIA-RDP88-00218R000300030001-0

FBIS–MAPPING OF FUNCTIONS TO HARDWARE

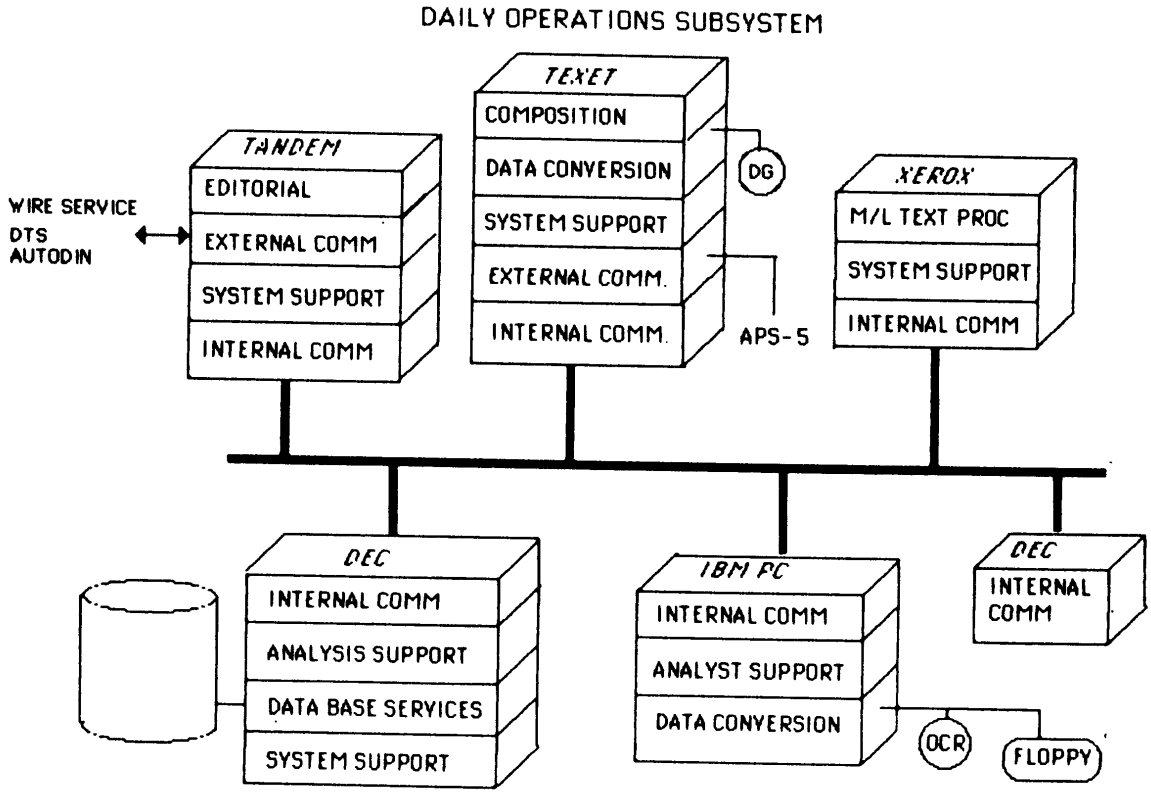

Declassified and Approved For Release 2012/05/31 : CIA-RDP88-00218R000300030001-0

Declassified and Approved For Release 2012/05/31 : CIA-RDP88-00218R000300030001-0

FBIS–MAPPING OF FUNCTIONS TO HARDWARE

TRANSLATION SERVICES

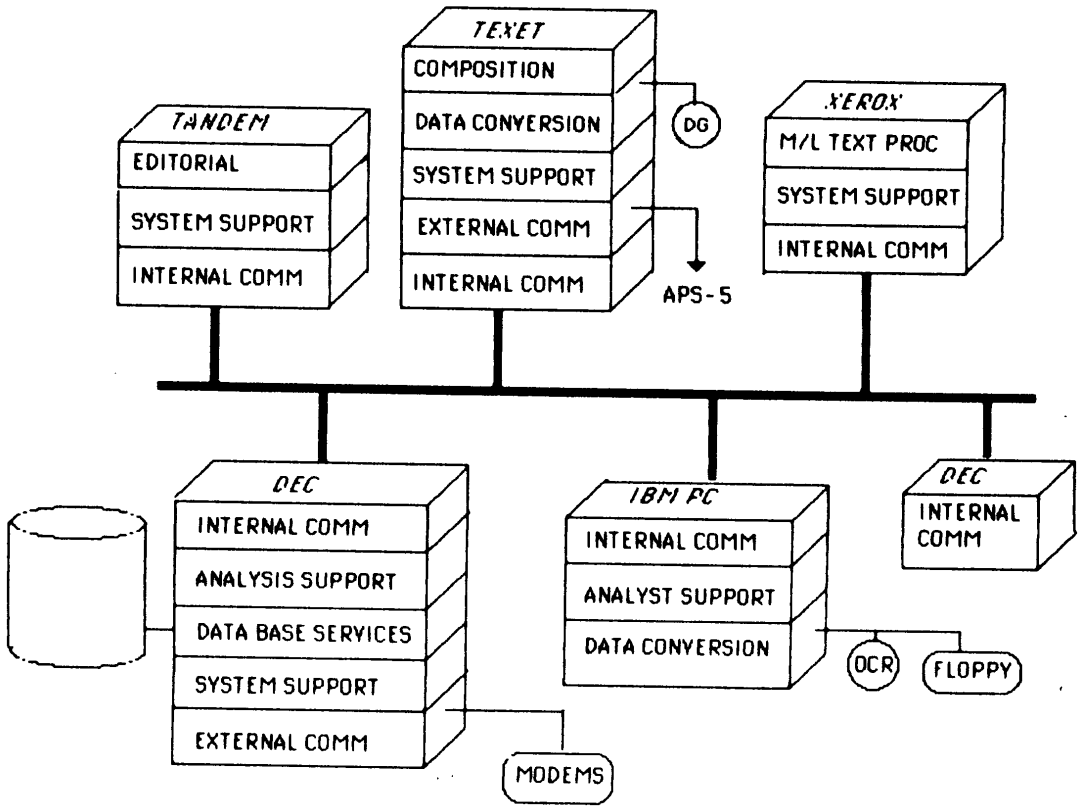

Declassified and Approved For Release 2012/05/31 : CIA-RDP88-00218R000300030001-0

Declassified and Approved For Release 2012/05/31 : CIA-RDP88-00218R000300030001-0

FBIS–MAPPING OF FUNCTIONS TO HARDWARE

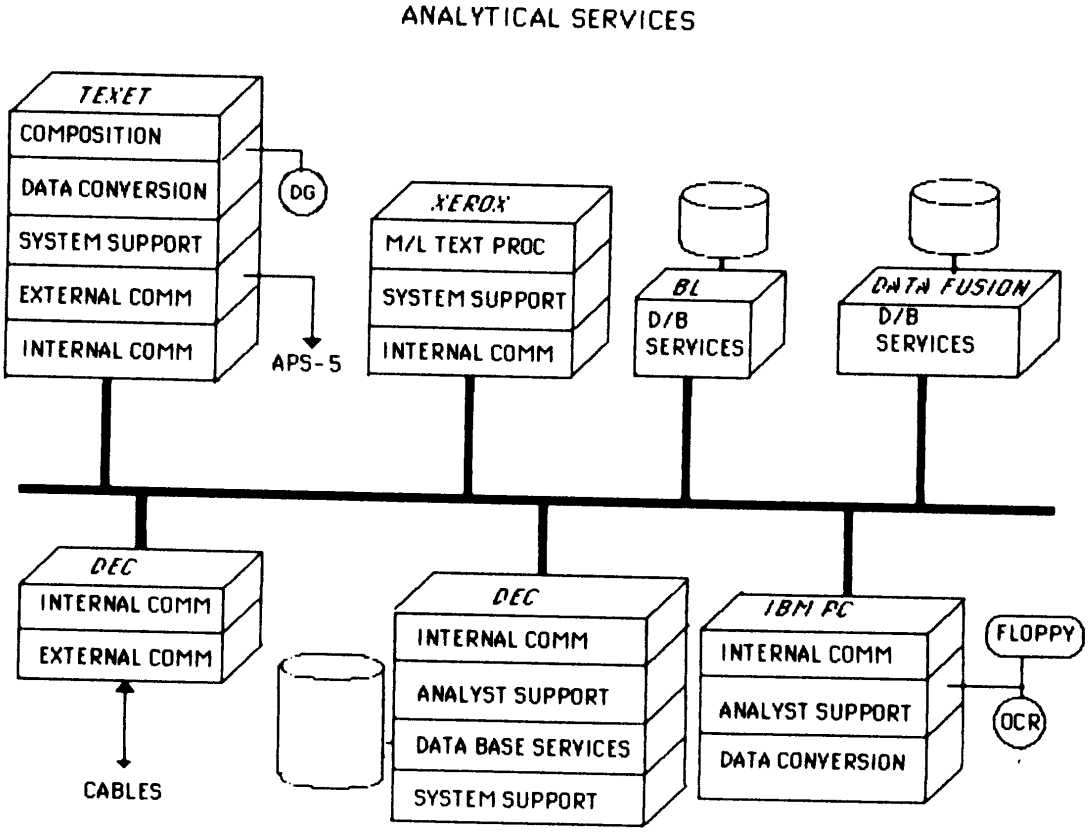

Declassified and Approved For Release 2012/05/31 : CIA-RDP88-00218R000300030001-0

Declassified and Approved For Release 2012/05/31 : CIA-RDP88-00218R000300030001-0

FBIS–DESIGN CONCEPT FOR SECURITY INTERFACE

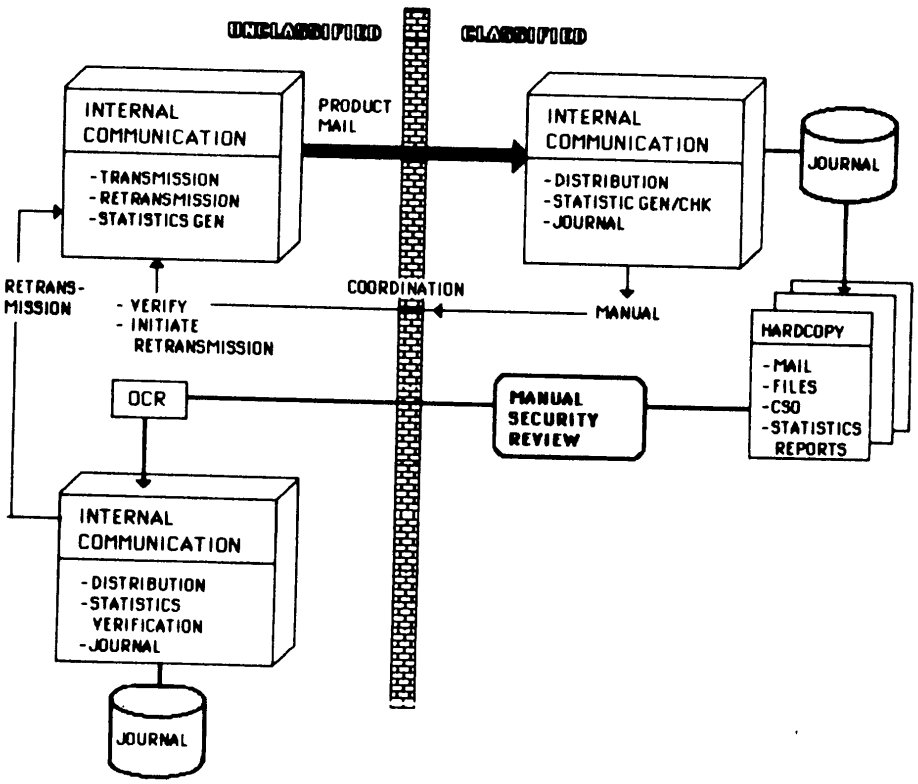

Declassified and Approved For Release 2012/05/31 : CIA-RDP88-00218R000300030001-0

Declassified and Approved For Release 2012/05/31 : CIA-RDP88-00218R000300030001-0

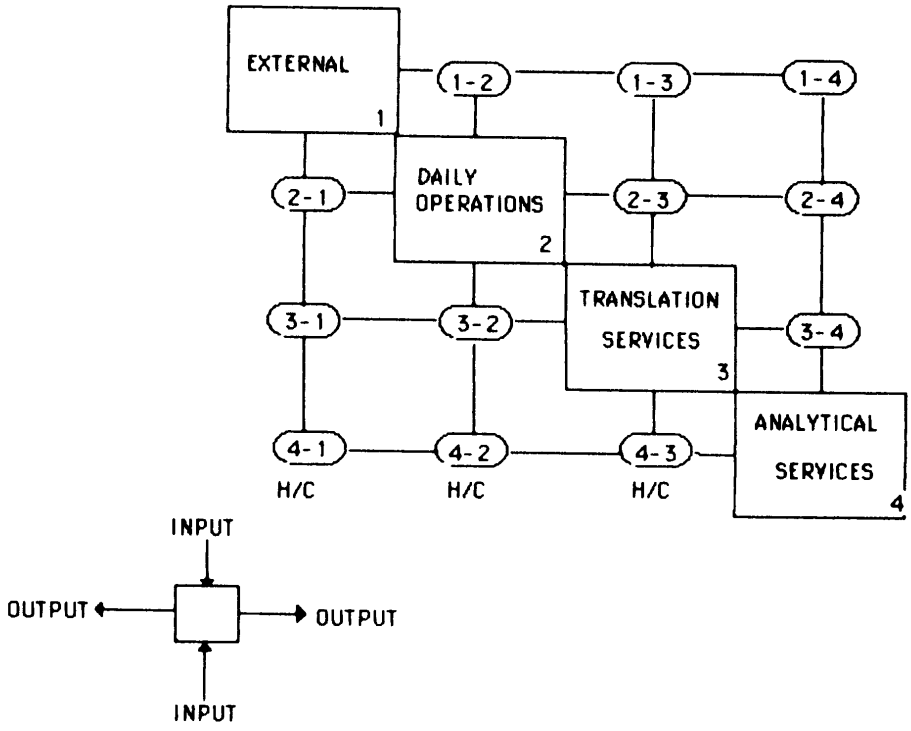

Declassified and Approved For Release 2012/05/31 : CIA-RDP88-00218R000300030001-0

Declassified and Approved For Release 2012/05/31 : CIA-RDP88-00218R000300030001-0

INTERFACE	MAJOR DATA PATH
1-2	TRANSLATED COPIES UPDATES TO TECHNICAL FILES - CRUISING REQUESTS FOR SERVICES ADMINSTRATIVE TRAFFIC STATISTICS
1-3	CSO CARDS TRANSLATED MATERIALS - SOFTCOPY VIA MODEM, FLOPPIES, CASSETTE - HARDCOPY QUERIES FOR ASSISTENCE STATISTICS SOS CARDS
1-4	**REQUIREMENTS** REQUESTS FOR SPECIAL PROCSSING
2-1	WIRE SERVICE RESPONSE TO SPECIAL PROCESSING REQUESTS APS-5 OUTPUT
2-3	DAILY REPORT OVERFLOW ELECTRONIC MAIL

Declassified and Approved For Release 2012/05/31 : CIA-RDP88-00218R000300030001-0

Declassified and Approved For Release 2012/05/31 : CIA-RDP88-00218R000300030001-0

FBIS–OVERALL DESIGN: N–SQUARED INTERFACES (CONT'D)

INTERFACE	MAJOR DATA PATH
2-4	BUREAU ADMINISTRATIVE TRAFFIC TECHNICAL FILE UPDATES DAILY REPORT ARCHIVES DAILY REPORT OVERFLOW VIRTUAL 3-4 INTERFACE UPDATE MESSAGES FOR WORKSTATION MAINTAINED FILES PROCESS STATISTICS ELECTRONIC MAIL GRAPHICS SERVICE REQUESTS
3-1	MATERIAL TO BE TRANSLATED INSTRUCTION SHEETS CSO RESPONSE TO QUERIES GLOSSARIES NEWSLETTER TRANSLATION AIDS APS-5 OUTPUT
3-2	VIRTUAL 3-4 INTERFACE
3-4	SERIAL REPORTS FOR ARCHIVAL CSO STATUS UPDATES ELECTRONIC MAIL PROCESS STATISTICS

Declassified and Approved For Release 2012/05/31 : CIA-RDP88-00218R000300030001-0

Declassified and Approved For Release 2012/05/31 : CIA-RDP88-00218R000300030001-0

INTERFACE	MAJOR DATA PATH
4-1	RESPONSE TO SPECIAL REQUESTS
4-2	ADMINISTRATIVE MESSAGES TECHNICAL FILE UPDATES FOR BUREAUS - JSL - COVERAGE - CRUISING RESPONSE TO SERVICE REQUESTS GLOSSARIES
4-3	CSO CARDS MATERIAL FOR TRANSLATION GLOSSARIES (UPDATES) ADMINISTRATIVE MESSAGES TRANSLATION AIDS

Declassified and Approved For Release 2012/05/31 : CIA-RDP88-00218R000300030001-0

Declassified and Approved For Release 2012/05/31 : CIA-RDP88-00218R000300030001-0

FBIS–OVERALL DESIGN: KEY TRADEOFFS

- Critical Vendor Selection
- Classified Computer Vendor Selection
- Analyst Workstation Selection
- Classified Workstation/Host Interconnect
- Data Base Vendor Selection

Declassified and Approved For Release 2012/05/31 : CIA-RDP88-00218R000300030001-0

Declassified and Approved For Release 2012/05/31 : CIA-RDP88-00218R000300030001-0

FBIS–EDITORIAL VENDOR TRADEOFF

	ATEX	CSI	PENTA	SII
LIFE CYCLE COSTS	1	1	3	3
HARDWARE	1	1	3	3
INTEGRATION	1	3	3	2
EDITORIAL SOFTWARE	5	2	1	5
COMPOSITION SOFTWARE	3	2	4	3
DATA REDUNDANCY	3	3	1	5

1 = POOR, 3 = AVERAGE, 5 = EXCELLENT

PRIMARY TRADEOFF CRITERIA: LIFE CYCLE COSTS
EDITORIAL SOFTWARE

Declassified and Approved For Release 2012/05/31 : CIA-RDP88-00218R000300030001-0

Declassified and Approved For Release 2012/05/31 : CIA-RDP88-00218R000300030001-0

- o Unlimited Directory and Lists
  - Assigned to single-key commands
  - Call up cross-reference directories
- o Inclusive Baskets and Desks
  - Define according to publication structure
  - Improve copy flow
  - User profiles
  - Sorting
- o User-Definable Forms and Templates
  - For entering any structured information
  - Read-only or invisible fields
- o User-Variable Split Screen
  - Side-by-side display of copy or directories
  - 1/2 x 1/2 or 1/3 x 2/3 or 2/3 x 1/3
- o Controlled Story and Page Releasing
  - Assign release authority in user profile

Declassified and Approved For Release 2012/05/31 : CIA-RDP88-00218R000300030001-0

Declassified and Approved For Release 2012/05/31 : CIA-RDP88-00218R000300030001-0

FBIS–SYSTEM INTEGRATORS, INC. FEATURES (CONT'D)

- o Automatic Copies for Audit Trails
  - Copy created each time story is edited
  - Maintained in historical record
  - Remains until story is deleted from system
- o Word Processing
  - Spelling checker
  - User-maintainable dictionary
- o Edit Trace
  - Text types: detailed, markup, and notes
  - Display options:

    in entirety, hidden, hidden with marker character
  - Assign attributes to inserted text
  - Display mode selectable for text type
- o Messages and Alerts
  - Send to single user or a group
  - Messages held until user signs on
  - Establish alert groups for baskets
- o Automatic Depth Calculation

Declassified and Approved For Release 2012/05/31 : CIA-RDP88-00218R000300030001-0

Declassified and Approved For Release 2012/05/31 : CIA-RDP88-00218R000300030001-0

FBIS–SYSTEM INTEGRATORS, INC. SHORTFALLS

- No Integrated Text and Graphics Alternatives
  - SII developed package
  - Independent developed and integrated package
  - Composition system vendor
- System Integration
  - Tandem External Interface

Declassified and Approved For Release 2012/05/31 : CIA-RDP88-00218R000300030001-0

Declassified and Approved For Release 2012/05/31 : CIA-RDP88-00218R000300030001-0

FBIS–SYSTEM INTEGRATORS, INC. SHORTFALLS

- No Integrated Text and Graphics
  - Alternatives
    - SII developed package
    - Independent developed and integrated package
    - Composition system vendor
- System Integration
  - Tandem External Interface

Declassified and Approved For Release 2012/05/31 : CIA-RDP88-00218R000300030001-0

Declassified and Approved For Release 2012/05/31 : CIA-RDP88-00218R000300030001-0

FBIS–COMPOSITION VENDOR TRADEOFF

	QUBIX	TEXET	VIEWTECH	XYVISION
WYSIWYG	5	4	2	4
LAN INTERFACE	3	4	2	1
TEXT INTERFACE	3	3	2	2
TARGET MARKET	1	3	2	3
HARDWARE	3	3	2	3

1 = POOR, 3 = AVERAGE, 5 = EXCELLENT

PRIMARY TRADEOFF: WYSIWYG
TARGET MARKET
INTERFACE

Declassified and Approved For Release 2012/05/31 : CIA-RDP88-00218R000300030001-0

Declassified and Approved For Release 2012/05/31 : CIA-RDP88-00218R000300030001-0

FBIS–TEXET PUBLISHING SYSTEM FEATURES

- TEXT AND GRAPHICS
  - WORK WITH TEXT AND GRAPHICS TOGETHER
  - GRAPHICS INCLUDES: LINE ART AND HALFTONE PHOTOGRAPHS
  - WORK WITH COMPLETE PAGES
  - TRUE SIZE, STYLE, AND POSITION
- PLAIN ENGLISH
  - NO TYPOGRAPHIC CODING
  - USE PLAIN ENGLISH MENUS
  - BUTTON OR MOUSE CONTROL

Declassified and Approved For Release 2012/05/31 : CIA-RDP88-00218R000300030001-0

Declassified and Approved For Release 2012/05/31 : CIA-RDP88-00218R000300030001-0

- WHAT-YOU-SEE-IS-WHAT-YOU-GET (WYSIWYG)
  - FULLY INTERACTIVE
  - MOVE ILLUSTRATIONS, CHANGE TYPEFACE
  - SEE RESULTS IMMEDIATELY
- PAGINATION
  - AUTOMATIC OR INTERACTIVE
  - FOOTNOTE PLACEMENT
  - RUNNING HEAD AND FEET PLACEMENT
  - WIDOW AND ORPHAN AVOIDANCE
  - TABLE OF EXCEPTION PAGES
  - ILLUSTRATION PLACEMENT BY "ANCHORS" IN TEXT
  - AUTOMATIC ASSOCIATION OF TITLE, LABELS, AND CAPTIONS WITH ILLUSTRATIONS
  - AUTOMATIC TABLE OF CONTENTS

Declassified and Approved For Release 2012/05/31 : CIA-RDP88-00218R000300030001-0

Declassified and Approved For Release 2012/05/31 : CIA-RDP88-00218R000300030001-0

- TEXT INTERFACE
  - "FLAT FILE" FORMAT
  - GENERIC TEXT FILE FORMAT
  - SII TEXT FILE FORMAT
- SYSTEM INTEGRATION
  - TEXET WORKSTATION HARDWARE
  - TCP/IP AND UNIX LOCAL AREA NETWORK INTERFACE
  - EXCELAN TDP/IP AND XNS LOCAL AREA NETWORK INTERFACE CARD

Declassified and Approved For Release 2012/05/31 : CIA-RDP88-00218R000300030001-0

Declassified and Approved For Release 2012/05/31 : CIA-RDP88-00218R000300030001-0

APPROACH A

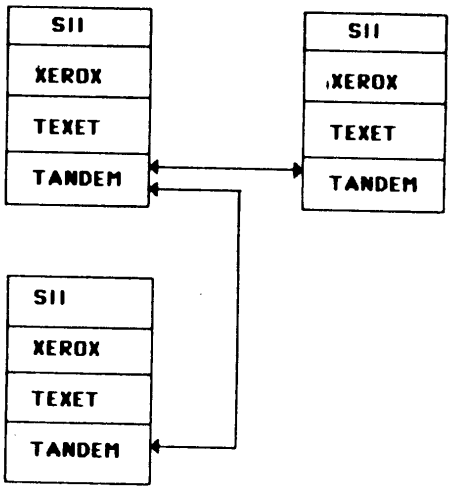

PRO
- -EXCELLENT MULTI-PROCESSOR SUPPORT
- -MINIMIZE NUMBER OF VENDORS

CON
- -NO NETWORK CAPABILITY
- -POOR S/W DEVELOPMENT ENVIRONMENT
- -ATTRIBUTE SEARCH (BL) DOES NOT INTERFACE WITH TANDEM
- -MINIMAL COMMERCIAL H/W AND S/W AVAILABLE

Declassified and Approved For Release 2012/05/31 : CIA-RDP88-00218R000300030001-0

Declassified and Approved For Release 2012/05/31 : CIA-RDP88-00218R000300030001-0

APPROACH B

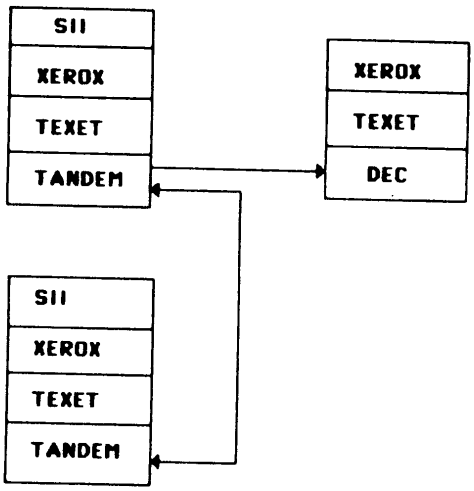

PRO
-MORE FLEXIBILITY TO RESOLVE INTERFACES

-BETTER DEVELOPMENT ENVIRONMENT WHERE MAJORITY OF DEVELOPMENT WILL OCCUR

-CAN TAKE ADVANTAGE OF COMMERCIAL SOFTWARE/HARDWARE

CON
-INTRODUCES ADDITIONAL VENDOR

-DUPLICATE DEVELOPMENT OF SOFTWARE

Declassified and Approved For Release 2012/05/31 : CIA-RDP88-00218R000300030001-0

Declassified and Approved For Release 2012/05/31 : CIA-RDP88-00218R000300030001-0

FBIS–ANALYTICAL SERVICE VENDOR SELECTION

APPROACH C

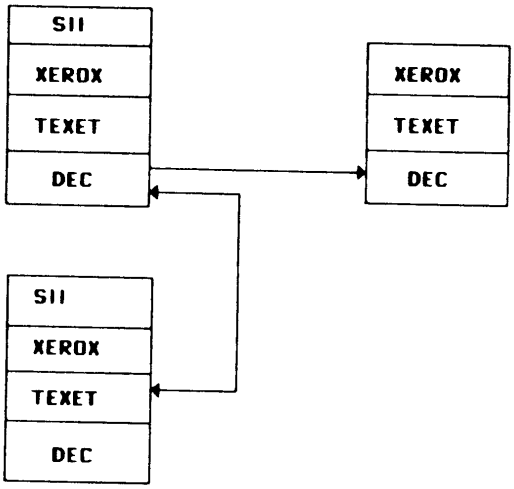

PRO
- -FLEXIBILITY IN RESOLVING INTERFACE ISSUES
- -CAN TAKE ADVANTAGE OF MORE COMMERCIAL PACKAGES IN ALL THREE SUBSYSTEMS
- -MINIMIZES DUPLICATION OF SOFTWARE DEVELOPMENT
- -FEWER INTERFACES TO RESOLVE

CON
- -ADDITIONAL VENDORS INTRODUCED INTO 2 SUBSYSTEMS
- -ADDITIONAL HARDWARE

Declassified and Approved For Release 2012/05/31 : CIA-RDP88-00218R000300030001-0

Declassified and Approved For Release 2012/05/31 : CIA-RDP88-00218R000300030001-0

ALPHANUMERIC TERMINALS

- **ADVANTAGES**
  - SIMPLE HOST INTERFACE
  - MOST HOST SOFTWARE IS STRUCTURED TO INTERFACE WITH ALPHANUMERIC TERMINALS
  - LOW COST
- DISADVANTAGES
  - NO STANDALONE CAPABILITY
  - HIGH NETWORK AND HOST LOADING

Declassified and Approved For Release 2012/05/31 : CIA-RDP88-00218R000300030001-0

Declassified and Approved For Release 2012/05/31 : CIA-RDP88-00218R000300030001-0

FBIS–ANALYST WORKSTATION SELECTION (CONT'D)

INTELLIGENT WORKSTATIONS

- ADVANTAGES
  - STANDALONE CAPABILITY
  - MINIMIZE LOADING OF HOSTS
  - CONSTANT USER RESPONSE TIME
  - PROMOTES FLEXIBILITY IN CONFIGURATION
  - ABUNDANCE OF AVAILABLE SOFTWARE
- DISADVANTAGES
  - INCREASED COMPLEXITY IN HOST INTERFACE
  - COST
- WORKSTATION SELECTION: IBM PC
  - COMMONALITY WITH BUREAUS
  - TEMPEST-APPROVED VERSIONS ARE AVAILABLE

Declassified and Approved For Release 2012/05/31 : CIA-RDP88-00218R000300030001-0

Declassified and Approved For Release 2012/05/31 : CIA-RDP88-00218R000300030001-0

FBIS–WORKSTATION/HOST INTERCONNECT

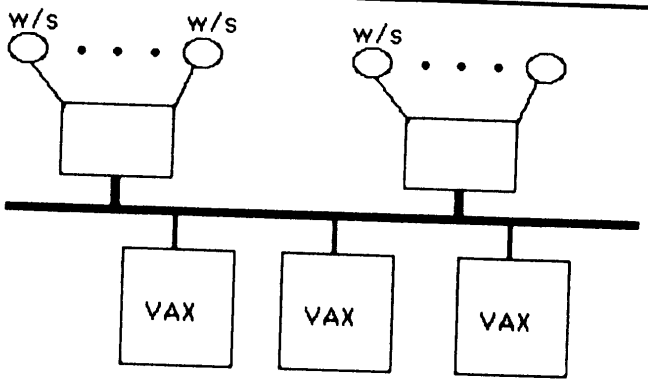

PRO

- SUPPORTED IN DUMB TERMINAL MODE
- LOCAL CONCENTRATOR TRAFFIC LOAD NOT ON BACKBONE
- PRINTER SUPPORTED
- LESS COMPLEX NETWORK DESIGN

CON

- LIMITED FLEXIBILITY IN LOCATING TERMINALS
- INCREASED INSTALLATION TIME

Declassified and Approved For Release 2012/05/31 : CIA-RDP88-00218R000300030001-0

Declassified and Approved For Release 2012/05/31 : CIA-RDP88-00218R000300030001-0

FBIS–WORKSTATION/HOST INTERCONNECT

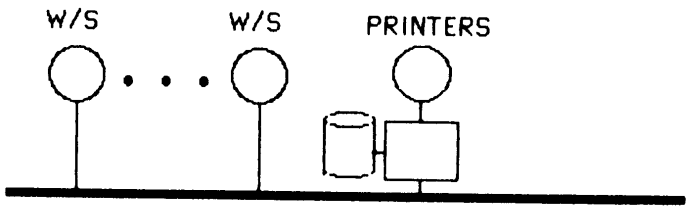

PRO

-MORE FLEXIBILITY

-ACCOMODATES GROWTH EASILY

CON

-INCREASE COMPLEXITY IN TERMINAL SOFTWARE

Declassified and Approved For Release 2012/05/31 : CIA-RDP88-00218R000300030001-0

Declassified and Approved For Release 2012/05/31 : CIA-RDP88-00218R000300030001-0

	SOFTWARE GENERAL PURPOSE	HARDWARE GENERAL PURPOSE	SOFTWARE LIBRARY/TEXT	HARDWARE TEXT SEARCH
REQUIRED FUNCTIONALITY				
- DATA TYPES				
- ATTRIBUTE	YES	YES	PARTIAL YES	PARTIAL YES
- TEXT	DIFFICULT OR NO	DIFFICULT OR NO	YES	YES
- RETRIEVAL				
- ATT. SEARCH (1.5.1,2.,4)	YES	YES	YES	PARTIAL YES
- TEXT SEARCH (1.5.1-1.5.5)	POSSIBLE BUT EXTREMELY SLOW	POSSIBLE BUT EXTREMELY SLOW	OFTEN NO; YES ONLY WITH FULL INVERSION	YES
- REPORTS (1.6.1)	YES	YES	LIMITED	PARTIAL YES
- HIT REVIEW (1.6.2)	YES	YES	YES	YES
IMPLEMENTATION RISK	MINIMAL	MINIMAL	LOW	LOW

Declassified and Approved For Release 2012/05/31 : CIA-RDP88-00218R000300030001-0

Declassified and Approved For Release 2012/05/31 : CIA-RDP88-00218R000300030001-0

FBIS–DATA BASE ARCHITECTURES: EVALUATION (CONT'D)

	SOFTWARE GENERAL PURPOSE	HARDWARE GENERAL PURPOSE	SOFTWARE LIBRARY/TEXT	HARDWARE TEXT SEARCH
DESIRED PERFORMANCE				
– ATT. SEARCH	SLOW	APPROACHES	MAY ACHIEVE	MAY ACHIEVE
– TEXT SEARCH	EXTREMELY SLOW	EXTREMELY SLOW	MAY ACHIEVE	MAY ACHIEVE
– UPDATE	SLOW	APPROACHES	SLOW	ACHIEVES
COST				
– BASIC SYSTEM	LOW	REASONABLE	HIGH	REASONABLE
– DISK OVERHEAD	LOW (5–20%)	LOW (5–20%)	VERY HIGH (50–300%)	LOW (0–40%)
INCREMENTAL GROWTH				
– STORAGE	ACCOMMODATED	ACCOMMODATED	ACCOMMODATED	ACCOMMODATED
– PERFORMANCE	EXCLUDED	MAY BE ACCOMM.	MAY BE ACCOMM.	MAY BE ACCOMM.
SUBSYSTEM UPGRADING	GENERALLY EXCLUDED	ACCOMMODATED	GENERALLY EXCLUDED	GENERALLY ACCOMMODATED
INTERFACE FLEXIBILITY	ACCOMMODATED	ACCOMMODATED	MAY BE ACCOMMODATED	GENERALLY ACCOMMODATED

Declassified and Approved For Release 2012/05/31 : CIA-RDP88-00218R000300030001-0

Declassified and Approved For Release 2012/05/31 : CIA-RDP88-00218R000300030001-0

FBIS–TEXT SEARCH VENDORS: FEATURES

	TRW FDF	GE GESCAN II	DATAFUSION AFP
ARCHITECTURAL FEATURES	SYSTOLIC ARRAY (PROGRAMMABLE)	PARALLEL QUERY PROCESSORS	8192 BYTES OF QUERY TERMS
FUNCTIONAL CAPABILITIES			
– BITS/CHARACTER, CHARACTERS MATCHABLE	8,256	8,256	7+,232
– EXACT MATCH	YES	YES	YES
– FIXED LENGTH "DON'T CARES"	YES	YES	YES
– VARIABLE LENGTH "DON'T CARES"	YES	YES	NO
– PROXIMITY	YES	YES	YES
– BOOLEAN (AND,OR)	YES	YES	YES
– CHARACTER STRING RANGING	YES	VERY LIMITED	VERY LIMITED
– NUMERIC RANGING	YES	VERY LIMITED	LIMITED
– NEAR TERM MATCH (E.G., 6 OUT OF 10)	NOT IMPLEMENTED	YES	VERY LIMITED
– USER-SPECIFIED ERROR TOLERANCE	YES	NO	NO
MULTIPLE CONCURRENT QUERIES	UNKNOWN	PROBABLY YES	YES

Declassified and Approved For Release 2012/05/31 : CIA-RDP88-00218R000300030001-0

Declassified and Approved For Release 2012/05/31 : CIA-RDP88-00218R000300030001-0

FBIS–TEXT SEARCH VENDORS: FEATURES (CONT'D)

	TRW FDF	GE GESCAN II	DATAFUSION AFP
PERFORMANCE			
- PROCESSOR SEARCH RATE	4.0 MB/SEC	2 MB/SEC	> 1.0 MB/SEC
- DISK SEACH RATE	.8 MB/SEC	10 MB/MINUTE	.8 MB/SEC
- COMPRESSED EQUIVALENT DISK SEARCH RATE			
- SIMPLE QUERY			8.0 MB/SEC
- PROXIMITY QUERY			2.7 MB/SEC
USER INTERFACE	SEARCH SPEC. LANGUAGE ONLY	TABULAR QUERY LANGUAGE	"NATURAL" AND STRUCTURED LANGUAGES
COMPATIBLE SYSTEMS	STANDALONE SUN WORKSTATION; NO INTERFACES	ADD-ON TO PDP 11/24-70 VAX 11/78x	ADD-ON TO PDP 11/23-70, VAX 11/78x
			STANDALONE SUBSYSTEM WITH X.25, ETHERNET INTERFACES
MULTIPLE PROCESSORS IN SYSTEM	NO	NO	YES
FILE STRUCTURE	UNKNOWN	STANDARD DEC	STANDARD DEC
FILE ACCESS	UNKNOWN	UNIBUS VIA CPU	DIRECT TO PROCESSOR
DISK STORAGE CAPACITY	1000-2000 MB	160,000 MB	2400 MB PER STANDALONE SUBSYSTEM
MIRRORED DISKS	UNKNOWN	UNKNOWN	NO

Declassified and Approved For Release 2012/05/31 : CIA-RDP88-00218R000300030001-0

Declassified and Approved For Release 2012/05/31 : CIA-RDP88-00218R000300030001-0

ESL
A Subsidiary of TRW

FBIS–TEXT SEARCH VENDORS: EVALUATION

TRW

CRITERIA	TRW FDF	GE GESCAN II	DATAFUSION AFP
REQUIRED FUNCTIONALITY	WILL EXCEED, WHEN COMPLETE	MEETS	PARTIALLY MEETS (MORE THAN 95%)
IMPLEMENTATION RISK	HIGH; USEFUL CONFIGURATIONS NOT AVAILABLE	LOW	LOW TO MODERATE
DESIRED PERFORMANCE	WOULD EXCEED, WITH MULTIPLE PROCESSORS	DOES NOT ACHIEVE	ACHIEVES, WITH MULTIPLE PROCESSORS
COST	REASONABLE	REASONABLE	REASONABLE
INCREMENTAL GROWTH			
- STORAGE	EXCLUDED (AS OF NOW)	ACCOMMODATED; USES DEC VAX DISK STORAGE	ACCOMMODATED, WITH MULTIPLE PROCESSORS
- PERFORMANCE	EXCLUDED (AS OF NOW)	EXCLUDED (ONE PROCESSOR PER SYSTEM)	ACCOMMODATED, WITH MULTIPLE PROCESSORS
SUBSYSTEM UPGRADING MODULARITY	ACCOMMODATED	ACCOMMODATED	ACCOMMODATED
INTERFACE FLEXIBILITY	DEBATABLE; ETHERNET	HIGH; INTERFACES THROUGH VAX HOST	MEDIUM; THROUGH PDP-11

Declassified and Approved For Release 2012/05/31 : CIA-RDP88-00218R000300030001-0

Declassified and Approved For Release 2012/05/31 : CIA-RDP88-00218R000300030001-0

FBIS–PERFORMANCE: ATTRIBUTE SEARCH DESIRES AND ESTIMATES

FACTORS:

QUERIES/DAY:
AG: 30 ANALYSTS X 20 QUERIES/DAY = 600
PROD: 150 ANALYSTS X 15 QUERIES/DAY = 2250
SUPPORT: 45 STAFF X 15 QUERIES/DAY = 675 TOTAL: 3525/DAY

HOURS/DAY:	8
QUERY PROCESSORS:	8
BYTES/QUERY	500
RESULT RECORDS/QUERY:	100
BYTES/RECORD:	500
RESULT BYTES/QUERY:	5E4 (RECORDS/QUERY X BYTES/RECORD)

DATA LOAD:

QUERY INPUT:
3525 QUERIES/DAY X 1 PROCESSORS
X 500 BYTES/QUERY
/ (8 HOURS/DAY X 3600 SEC/HOUR) = 62 BYTES/SEC

QUERY OUTPUT:
3525 QUERIES/DAY X 5E4 RESULT BYTES/QUERY
/ (8 HOURS/DAY X 3600 SEC/HOUR) = 6200 BYTES/SEC

EXAMPLE ATTRIBUTE QUERY PERFORMANCE:

A SAMPLE BENCHMARK SHOWED 9 MIXED QUERIES FOR 8 USERS TOOK 244 SECONDS ON A SINGLE BRITTON LEE PROCESSOR.

THIS TRANSLATES TO: 3.4 SECONDS/QUERY OR 8470 QUERIES/DAY

Declassified and Approved For Release 2012/05/31 : CIA-RDP88-00218R000300030001-0

Declassified and Approved For Release 2012/05/31 : CIA-RDP88-00218R000300030001-0

FBIS–PERFORMANCE: TEXT SEARCH DESIRES

FACTORS:

QUERIES/DAY:	AG:	30 ANALYSTS x 5 QUERIES/DAY =	150	
	PROD:	150 ANALYSTS x 2 QUERIES/DAY =	300	TOTAL: 450
HOURS/DAY:		8		
SEARCH PROCESSORS:		8		
BYTES/QUERY		500		
BYTES/HIT FILE INDEX:		30		
HIT FILES/QUERY:		200		
BYTES/HIT FILE:		1.37E4		

DATA LOAD:

QUERY INPUT:
450 QUERIES/DAY x 8 PROCESSORS
x 500 BYTES/QUERY
/ (8 HOURS/DAY x 3600 SEC/HOUR) = 63 BYTES/SEC

INDEX OUTPUT:
450 QUERIES/DAY x 200 HIT FILES/QUERY
x 30 BYTES/QUERY
/ (8 HOURS/DAY x 3600 SEC/HOUR) = 94 BYTES/SEC

HIT FILE BROWSE OUTPUT:

450 QUERIES/DAY x 200 HIT FILES/QUERY
x 1.37E4 BYTES/HIT FILE
/ (8 HOURS/DAY x 3600 SEC/HOUT) = 4.3E4 BYTES/SEC

Declassified and Approved For Release 2012/05/31 : CIA-RDP88-00218R000300030001-0

Declassified and Approved For Release 2012/05/31 : CIA-RDP88-00218R000300030001-0

FBIS–PERFORMANCE: TEXT SEARCH FACTORS

FACTOR	STANDARD OR VENDOR VALUE	CONSERVATIVE VALUE USED
SOURCE TEXT BYTES/WORD	4-8 TYPICAL	10 BYTES/WORD
AFP COMPRESSED FILE SIZE	3-5% FOR LEGAL FILES	10%
AFP PARTIAL COMPRESSED FILE SIZE	30%	30%
SEARCH SPEED (= DISK ACCESS SPEED)	.8 MB PER SECOND	.8 MB PER SECOND
NUMBER OF AFP PROCESSORS PER QUERY	14 AVAILABLE: 7 TSPs (2 AFPs EACH) ARE NEEDED TO STORE THE COMPRESSED SEARCH DATA	8 PER QUERY: TO ALLOW FOR DISJOINT, CONCURRANT QUERIES; AND FOR INCREMENTAL GROWTH
OVERHEAD PER QUERY	1-3 SEC. ON TSP UNKNOWN ON HOST	8 SEC. BEFORE QUERY 2 SEC. AFTER QUERY
NUMBER OF SIMULTANEOUS QUERIES PER PROCESSOR	50-70 (UP TO 600 TERMS TOTAL)	10 (IF WELL COORDINATED)

Declassified and Approved For Release 2012/05/31 : CIA-RDP88-00218R000300030001-0

Declassified and Approved For Release 2012/05/31 : CIA-RDP88-00218R000300030001-0

FBIS–PERFORMANCE: TEXT SEARCH EXAMPLE

EXAMPLE SEARCH REQUEST:

TO SEARCH DAILY REPORTS AND JPRS FOR 1 FULL YEAR OF USSR DATA:

= 25% OF 910 MB + 2600 MB
= 877.5 MB; USE 900 MB FOR ESTIMATE
= 60,000 ITEMS OF 1500 WORDS EACH

	SIMPLE SEARCH (NO PROXIMITY; USES 10% FILE)	PROXIMITY SEARCH (PROXIMITY REQUIRED; USES 30% FILE)
INITAL OVERHEAD (ASSUMED)	8 SECONDS	8 SECONDS
PROCESSOR SEARCH TIME (NUMBER OF MB/.8 MB PER SECOND/ 8 PROCESSORS)	15 SECONDS	43 SECONDS
CLOSING OVERHEAD (ASSUMED)	2 SECONDS	2 SECONDS
TOTAL SEARCH TIME (SUM)	25 SECONDS	53 SECONDS
FIRST RESPONSE TO USER (ASSUMING 100 HITS)	11 SECONDS (10.15)	11 SECONDS (10.43)

SEARCHES PER DAY

(ASSUMES THAT SIMULTANEAOUS QUERIES ARE NOT TAKEN ADVANTAGE OF.)

EACH TYPE	1152	543
AVERAGE (50% OF EACH)	847	

Declassified and Approved For Release 2012/05/31 : CIA-RDP88-00218R000300030001-0

Declassified and Approved For Release 2012/05/31 : CIA-RDP88-00218R000300030001-0

NOTES ON TEXT SEARCH EXAMPLE

- SHORTER PROCESSOR SEARCH TIMES WILL RESULT FROM SEARCHING SMALLER PORTIONS (E.G., 3 MONTHS) OF THE TEXT DATA, WITH AN APPROPRIATE FILE ORGANIZATION
- NO DEGRADATION OF SEARCH TIMES WILL RESULT AS THE DATA BASE GROWS
- MULTIPLE QUERIES, FROM ONE OR MORE USERS, CAN BE HANDLED AT THESE SAME RATES, IF THE QUERIES ARE COORDINATED TO SEARCH THE SAME PARTITIONS OF THE TEXT DATA

Declassified and Approved For Release 2012/05/31 : CIA-RDP88-00218R000300030001-0

Declassified and Approved For Release 2012/05/31 : CIA-RDP88-00218R000300030001-0

ALL FIGURES ARE IN BYTES/SECOND.

	DESIRED	PERFORMANCE ACHIEVED
ORIGINAL DATA DATA BASE		
INPUT		
TEXT	7.11E2	
GRAPHICS	4.95E1	
OUTPUT		
TEXT	4.34E4	
TOTAL	4.42E4	
TEXT SEARCH DATA BASE		
INPUT		
TEXT	2.84E2	
QUERY	6.30E1	
OUTPUT		
INDICES	9.40E1	
TOTAL	4.41E2	2. E6 (4 TSP x .5 MB/SEC)
ATTRIBUTE DATA BASE		
INPUT		
ORIGINAL DATA	4.97E1	
QUERY	6.20E1	
OUTPUT		
QUERY	6.20E3	
TOTAL	6.31E3	
TOTAL NET LOAD	5.10E4	1. E6

Declassified and Approved For Release 2012/05/31 : CIA-RDP88-00218R000300030001-0

Declassified and Approved For Release 2012/05/31 : CIA-RDP88-00218R000300030001-0

	PERFORMANCE	
	DESIRED	ACHIEVED
TEXT SEARCH DATA BASE (4 TSPs = 8 PROCESSORS; EACH QUERY = USSR FOR 1 YEAR, OR 3 MONTHS OF JPRS+DAILY REPORTS)		
QUERIES/DAY	450	847
ATTRIBUTE DATA BASE (1 IDM 500/2 PROCESSOR)		
QUERIES/DAY	3525	8470

Declassified and Approved For Release 2012/05/31 : CIA-RDP88-00218R000300030001-0

Declassified and Approved For Release 2012/05/31 : CIA-RDP88-00218R000300030001-0

- OVERALL DESIGN
- ----> DAILY OPERATIONS SUBSYSTEM
  - DETAILED BLOCK DIAGRAM
  - SIZING
  - VENDOR FEATURES
  - INTERFACES
  - MAJOR DATA PATHS
- TRANSLATION SERVICES SUBSYSTEM
- ANALYTICAL SERVICES SUBSYSTEM
- DESIGN SUMMARY
- OPERATIONS CONCEPT
- SUMMARY

Declassified and Approved For Release 2012/05/31 : CIA-RDP88-00218R000300030001-0

Declassified and Approved For Release 2012/05/31 : CIA-RDP88-00218R000300030001-0

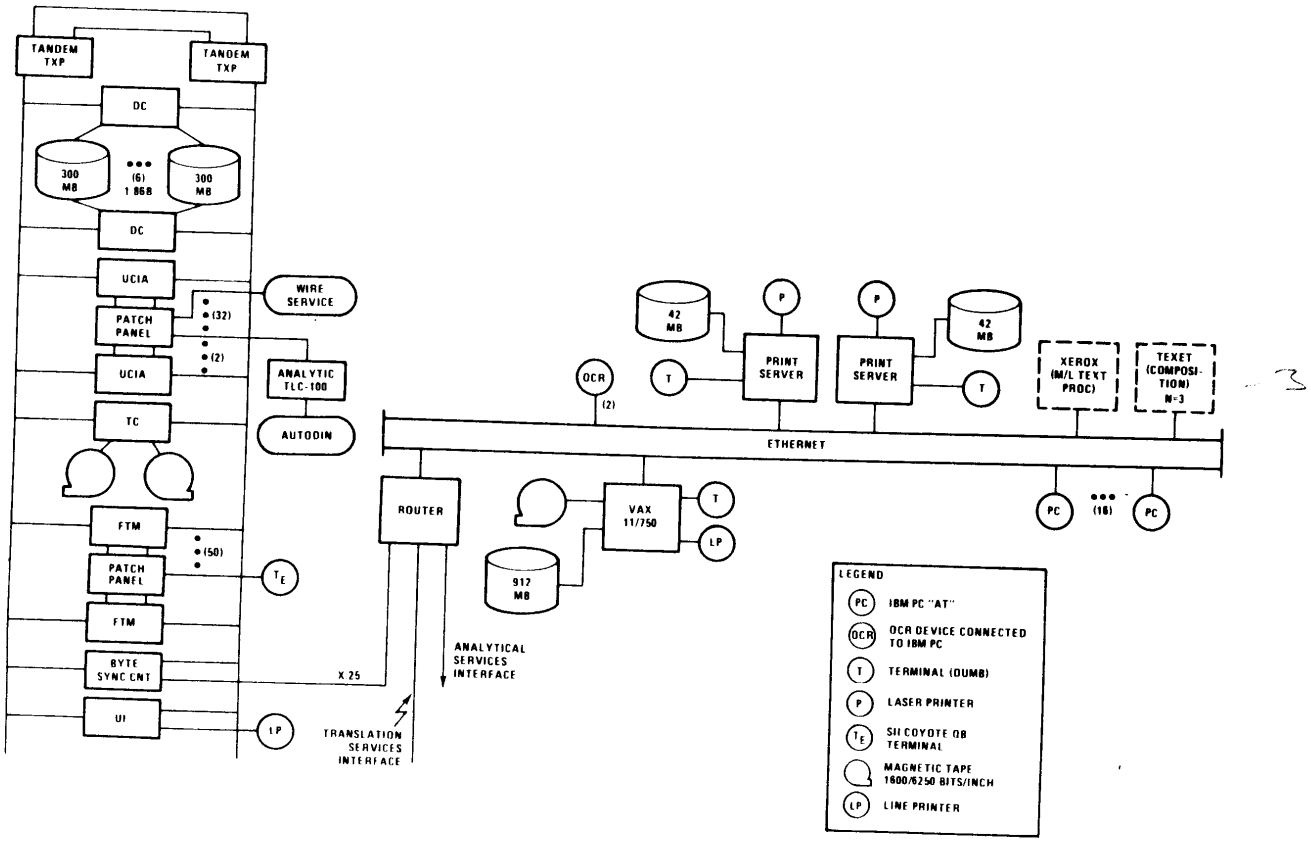

Declassified and Approved For Release 2012/05/31 : CIA-RDP88-00218R000300030001-0

Declassified and Approved For Release 2012/05/31 : CIA-RDP88-00218R000300030001-0

ESL
A Subsidiary of TRW

FBIS–COMPOSITION AND MULTILINGUAL TEXT PROCESSING ELEMENTS

TRW

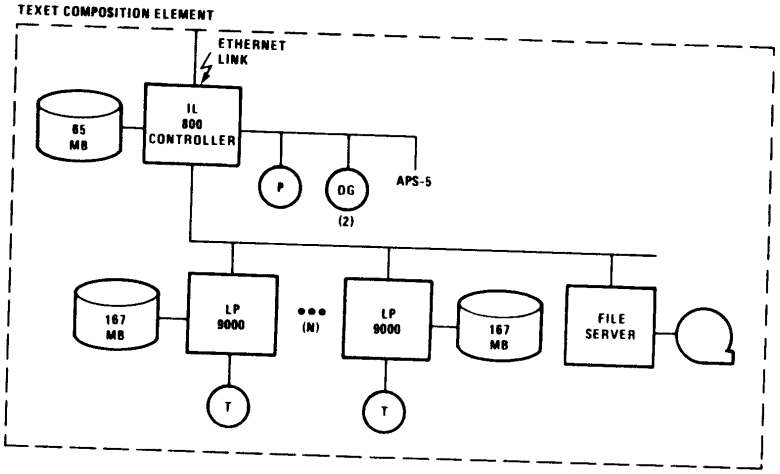

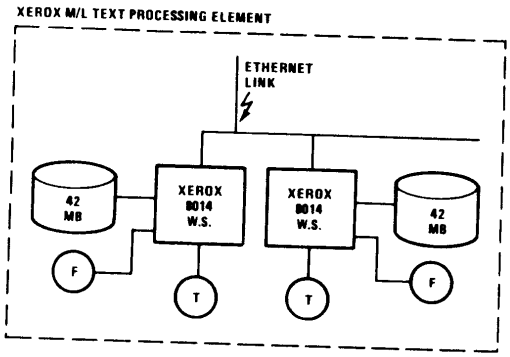

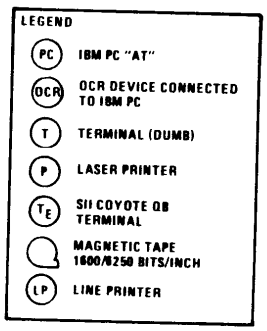

Declassified and Approved For Release 2012/05/31 : CIA-RDP88-00218R000300030001-0

Declassified and Approved For Release 2012/05/31 : CIA-RDP88-00218R000300030001-0

FBIS–DAILY OPERATIONS: TERMINAL SIZING

	Terminal Count		
	Old	New	Update Rational
Wire Service Editors	3	5	Add 2 for supervisors (based on information from previous briefing)
Daily Report Editors	36	40	Add 4 for supervisors (based on information from previous briefing)
Editor Backup and Training (10%)	4	5	Percentage
	43	50	
System Support Terminals	4	16	(based on information from previous briefing)
Composition	10	3	Assumes more is done in batch mode

Declassified and Approved For Release 2012/05/31 : CIA-RDP88-00218R000300030001-0

Declassified and Approved For Release 2012/05/31 : CIA-RDP88-00218R000300030001-0

ESL
A Subsidiary of TRW

FBIS–DAILY OPERATIONS: SOFTWARE INTERFACES

TRW

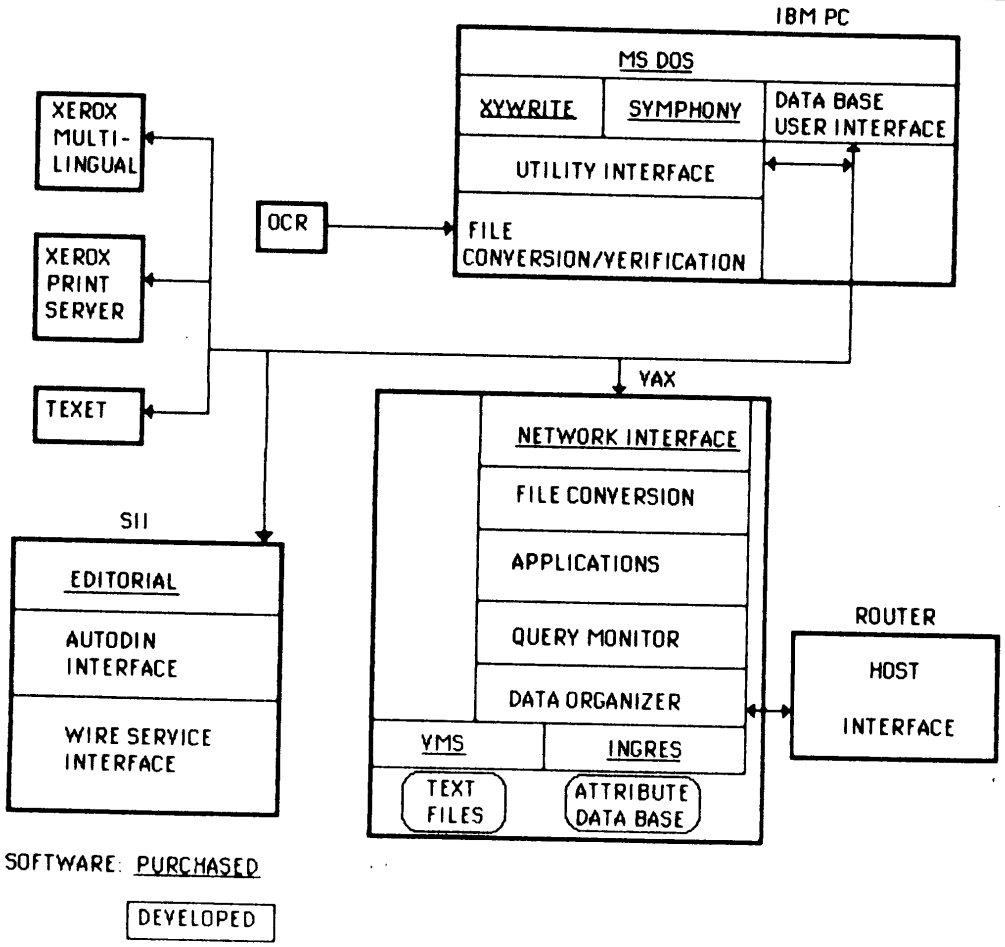

Declassified and Approved For Release 2012/05/31 : CIA-RDP88-00218R000300030001-0

Declassified and Approved For Release 2012/05/31 : CIA-RDP88-00218R000300030001-0

FBIS–DAILY OPERATIONS–ARCHITECTURE N–SQUARED CHART

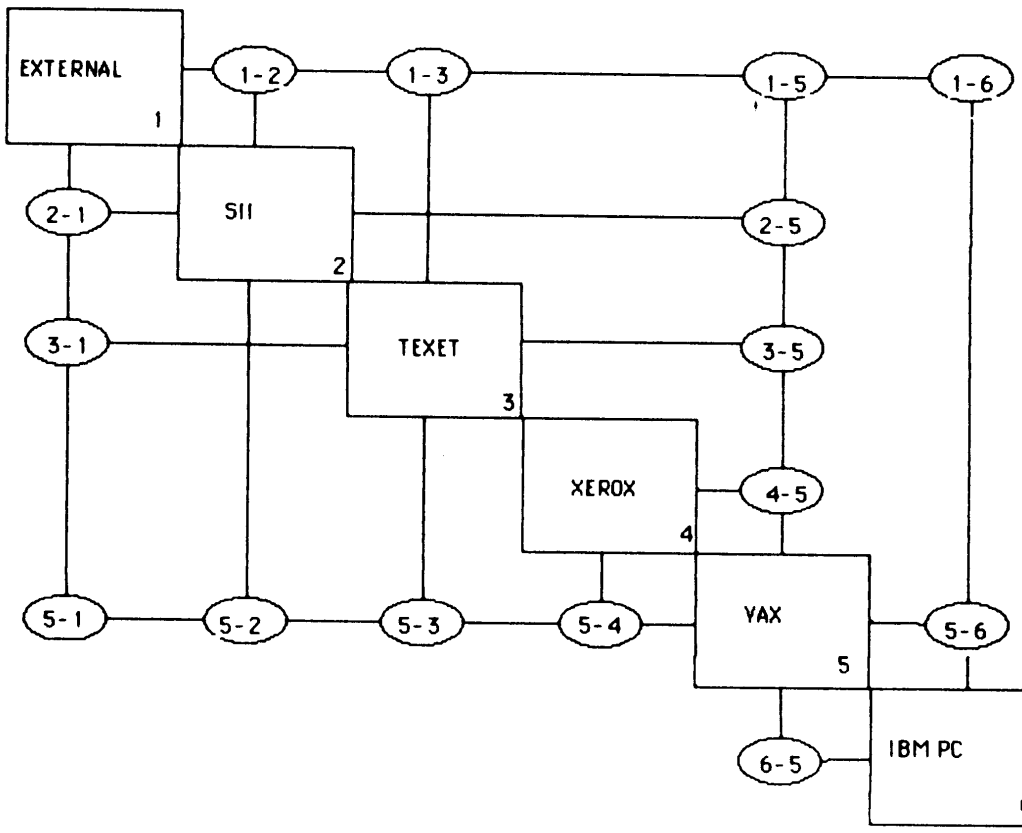

details on next chart

Declassified and Approved For Release 2012/05/31 : CIA-RDP88-00218R000300030001-0

Declassified and Approved For Release 2012/05/31 : CIA-RDP88-00218R000300030001-0

INTERFACE	MAJOR DATA PATH
1-2: EXTERNAL TO SII	FIELD COPY UPDATES TO TECHNICAL FILES REQUEST FOR SERVICE ADMINISTRATIVE MESSAGES BUREAU STATISTICS
1-3: EXTERNAL TO TEXET	HARDCOPY GRAPHICS
1-5: EXTERNAL TO VAX	TRANSLATION/ANALYTICAL SERVICES INTERFACE
2-1: SII TO EXTERNAL	WIRE SERVICE ADMINISTRATIVE MESSAGES TO BUREAU PROCESSING REQUESTS FOR BUREAUS PLANNED ANALYTICAL PRODUCTION REPORT
2-5: SII TO VAX	MAIL STATISTICS DAILY REPORTS EDIT TRACE FILES FIELD COPY MESSAGE TRAFFIC EDIT DAILY REPORT

Declassified and Approved For Release 2012/05/31 : CIA-RDP88-00218R000300030001-0

Declassified and Approved For Release 2012/05/31 : CIA-RDP88-00218R000300030001-0

FBIS–DAILY OPERATIONS: N–SQUARED INTERFACES (CONT'D)

INTERFACE	MAJOR DATA PATH
3-1: TEXET TO EXTERNAL	APS-5 COMMANDS
3-5: TEXET TO VAX	DAILY REPORTS PROCESSING STATISTICS GRAPHICS
4-5: XEROX TO VAX	REFERENCE AIDS GLOSSARIES MIXED LANGUAGE TEXT
5-1: VAX TO EXTERNAL	BUREAU TRAFFIC DAILY REPORT PROCESSING STATISTICS DAILY REPORT OVERFLOW MAIL FILE UPDATES TRANSLATION/ANALYTICAL SERVICES INTERFACE
5-2: VAX TO SII	FIELD COPY MAIL EDIT TRACE FILES

Declassified and Approved For Release 2012/05/31 : CIA-RDP88-00218R000300030001-0

Declassified and Approved For Release 2012/05/31 : CIA-RDP88-00218R000300030001-0

FBIS–DAILY OPERATIONS: N–SQUARED INTERFACES (CONT'D)

INTERFACE	MAJOR DATA PATH
5-3: VAX TO TEXET	EDITED DAILY REPORT GRAPHICS AND PARAMETERS
5-4: VAX TO XEROX	REFERENCE AIDS GLOSSARIES
5-6: VAX TO IBM PC	DAILY REPORT TEXT PERSONAL FILES PROCESSING STATISTICS REPORT TEXT
6-5: IBM PC TO VAX	REPORT TEXT PERSONAL FILES FILE REQUESTS

Declassified and Approved For Release 2012/05/31 : CIA-RDP88-00218R000300030001-0

Declassified and Approved For Release 2012/05/31 : CIA-RDP88-00218R000300030001-0

ESL
A Subsidiary of TRW

FBIS–DAILY OPERATIONS–DAILY REPORT DATA PATH

TRW

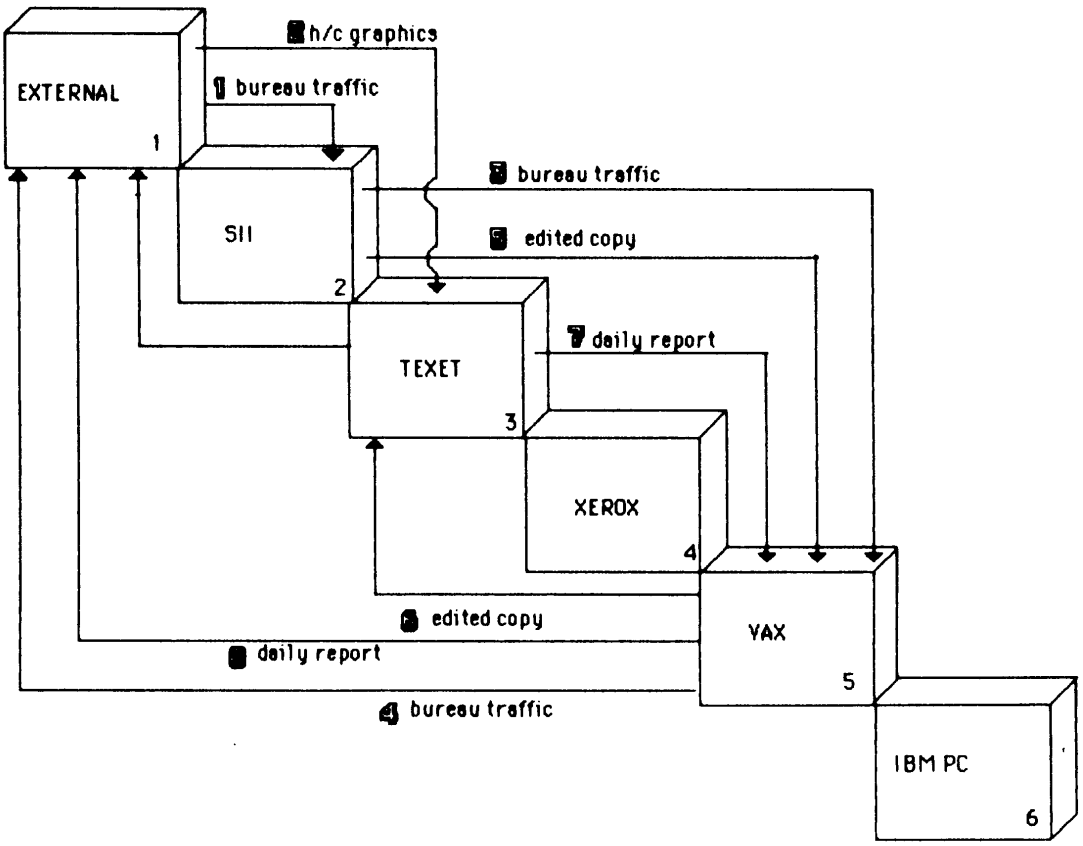

Declassified and Approved For Release 2012/05/31 : CIA-RDP88-00218R000300030001-0

Declassified and Approved For Release 2012/05/31 : CIA-RDP88-00218R000300030001-0

- OVERALL DESIGN
- DAILY OPERATIONS SUBSYSTEM
- ----> TRANSLATION SERVICES SUBSYSTEM
  - DETAILED BLOCK DIAGRAM
  - SIZING
  - VENDOR FEATURES
  - INTERFACES
  - MAJOR DATA PATHS
- ANALYTICAL SERVICES SUBSYSTEM
- DESIGN SUMMARY
- OPERATIONS CONCEPT
- SUMMARY

Declassified and Approved For Release 2012/05/31 : CIA-RDP88-00218R000300030001-0

Declassified and Approved For Release 2012/05/31 : CIA-RDP88-00218R000300030001-0

ESL
A Subsidiary of TRW

TRANSLATION SERVICES SUBSYSTEM

TRW

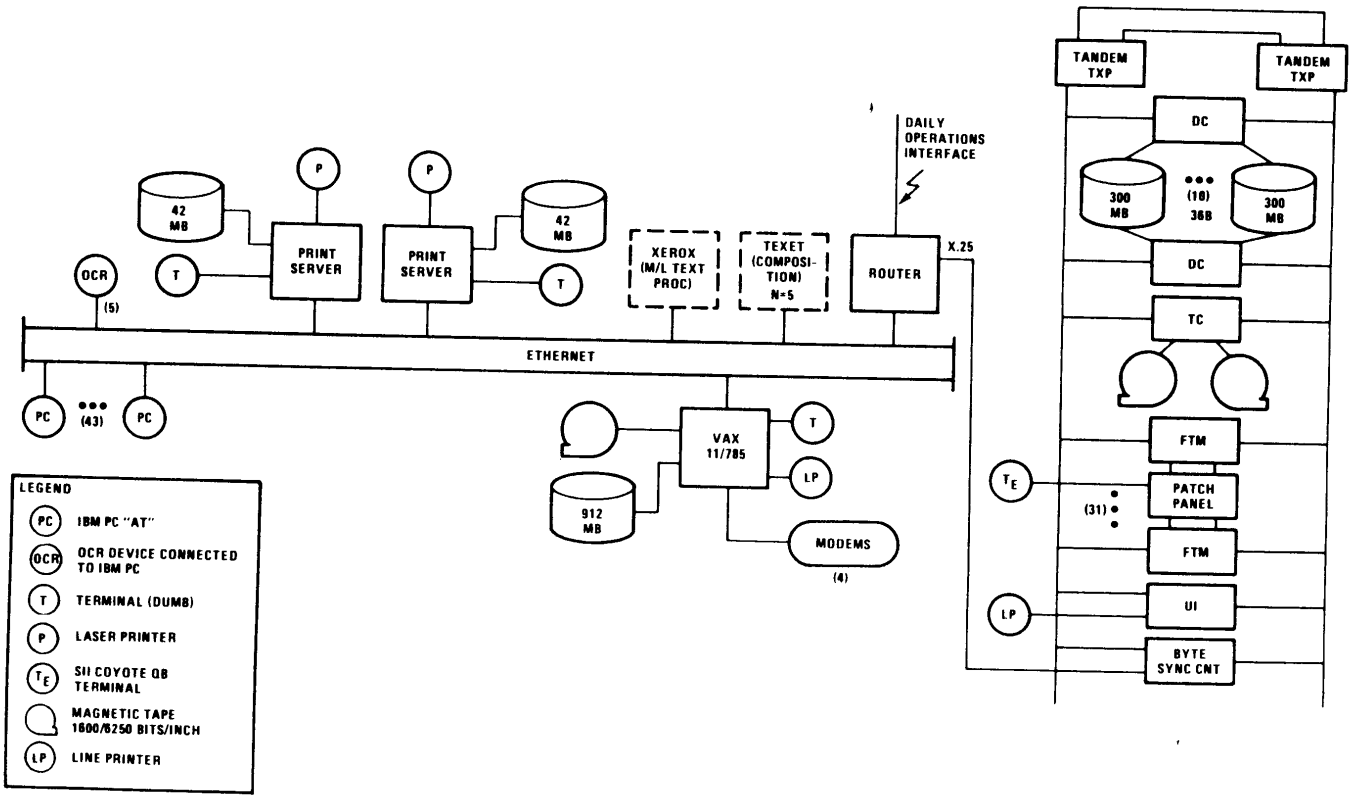

Declassified and Approved For Release 2012/05/31 : CIA-RDP88-00218R000300030001-0

Declassified and Approved For Release 2012/05/31 : CIA-RDP88-00218R000300030001-0

RATIONALE

- o ASSUMPTIONS:
  - 660 OUTSTANDING REQUESTS PER DESK
  - 50 TRANSLATION REQUESTS PER DAY PER DESK
  - 50 TRANSLATIONS RECEIVED PER DAY PER DESK
  - IC SELECTION RATE: 1 EVERY 30 MINUTES
  - CSO OR TRANSLATION ENTRY IS 1 EVERY 30 MINUTES
- o CALCULATIONS:
  - WORKSTATIONS FOR IC SELECT = 50/12x3 = 12
  - WORKSTATIONS FOR CSO/TRANSLATION ENTRY = 50/12x3 = 12
  - WORKSTATIONS FOR MONITORING CSOs AND ICs = 2/AREA = 6
  - WORKSTATIONS FOR SERIAL REPORT MANAGEMENT = 2/AREA = 6
  - SYSTEM SUPPORT (10%) = 7

  43

Declassified and Approved For Release 2012/05/31 : CIA-RDP88-00218R000300030001-0

Declassified and Approved For Release 2012/05/31 : CIA-RDP88-00218R000300030001-0

	Terminal Count		
	Old	New	Update Rational
JPRS Editors	25	31	Add 3 for supervisors and 3 for training and backup
JPRS Desk Officer	6	36	New evaluation of IC management workload
System Support Terminals	5	7	Percentage
	36	43	
OCR	5	5	
Digitizers	2	2	
Compostion Stations	13	5	Assumes more is done in batch mode

Declassified and Approved For Release 2012/05/31 : CIA-RDP88-00218R000300030001-0

Declassified and Approved For Release 2012/05/31 : CIA-RDP88-00218R000300030001-0

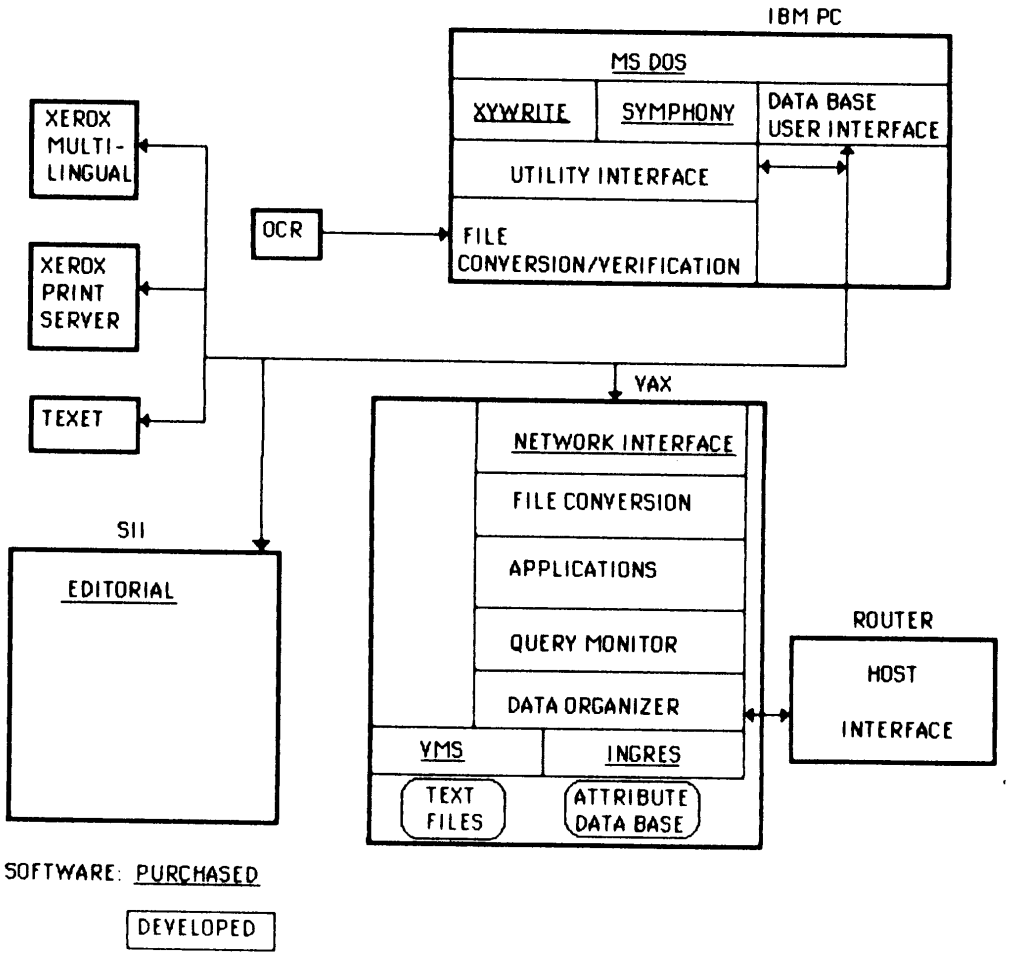

Declassified and Approved For Release 2012/05/31 : CIA-RDP88-00218R000300030001-0

Declassified and Approved For Release 2012/05/31 : CIA-RDP88-00218R000300030001-0

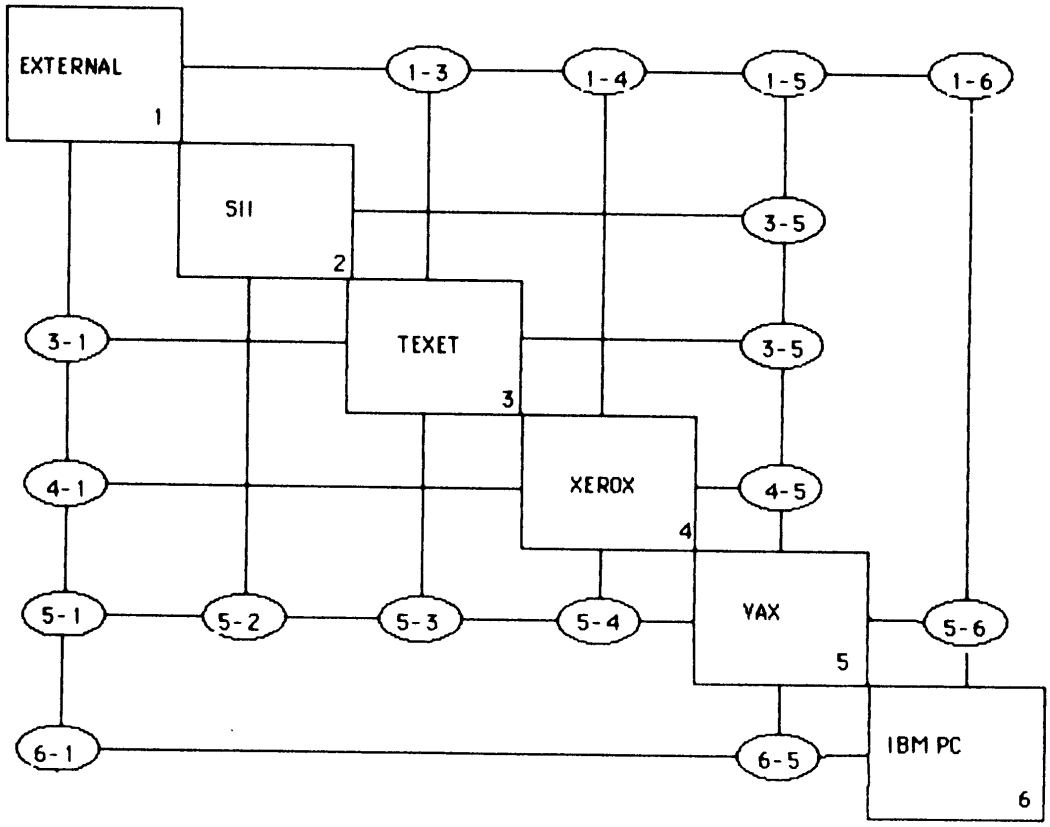

Declassified and Approved For Release 2012/05/31 : CIA-RDP88-00218R000300030001-0

Declassified and Approved For Release 2012/05/31 : CIA-RDP88-00218R000300030001-0

INTERFACE	MAJOR DATA PATH
1-3: EXTERNAL TO TEXET	HARDCOPY GRAPHICS
1-4: EXTERNAL TO XEROX	REFERENCE AIDS GLOSSARIES JPRS NEWSLETTER
1-5: EXTERNAL TO VAX	DAILY REPORT OVERFLOW DAILY REPORT SELECTS MAIL
1-6: EXTERNAL TO IBM PC	CSO CARDS HARDCOPY TRANSLATIONS SOS FORMS
2-5: SII TO VAX	EDITED JPRS REPORTS PROCSSING STATISTICS MAIL EDIT TRACE FILES

Declassified and Approved For Release 2012/05/31 : CIA-RDP88-00218R000300030001-0

Declassified and Approved For Release 2012/05/31 : CIA-RDP88-00218R000300030001-0

INTERFACE	MAJOR DATA PATH
3-1: TEXET TO EXTERNAL	APS-5 COMMANDS
3-5: TEXET TO VAX	DAILY REPORTS PROCESSING STATISTICS GRAPHICS
4-1: XEROX TO EXTERNAL	REFERENCE AIDS (VIA FLOPPY DISK)
4-5: XEROX TO VAX	REFERENCE AIDS GLOSSARIES MIXED LANGUAGE TEXT JPRS NEWLETTER
5-1: VAX TO EXTERNAL	MAIL JPRS REPORT PROCESSING STATISTICS
5-2: VAX TO SII	JPRS REPORTS EDIT TRACE FILES

Declassified and Approved For Release 2012/05/31 : CIA-RDP88-00218R000300030001-0

Declassified and Approved For Release 2012/05/31 : CIA-RDP88-00218R000300030001-0

INTERFACE	MAJOR DATA PATH
5-3: VAX TO TEXET	JPRS REPORTS GRAPHICS AND PARAMETERS
5-4: VAX TO XEROX	REFERENCE AIDS GLOSSARIES JPRS NEWLETTER MIXED TEXT FILES
5-6: VAX TO IBM PC	CSO CARD FILE SOS FILE JPRS REPORTS ADMINISTRATIVE REPORTS IC FILE TRANSLATIONS
6-5: IBM PC TO VAX	CSO CARD FILE SOS FILE JPRS REPORTS ADMINISTRATIVE REPORTS IC FILE TRANSLATIONS

Declassified and Approved For Release 2012/05/31 : CIA-RDP88-00218R000300030001-0

Declassified and Approved For Release 2012/05/31 : CIA-RDP88-00218R000300030001-0

ESL
A Subsidiary of TRW

FBIS–TRANSLATION SERVICES: JPRS REPORTS DATA PATH

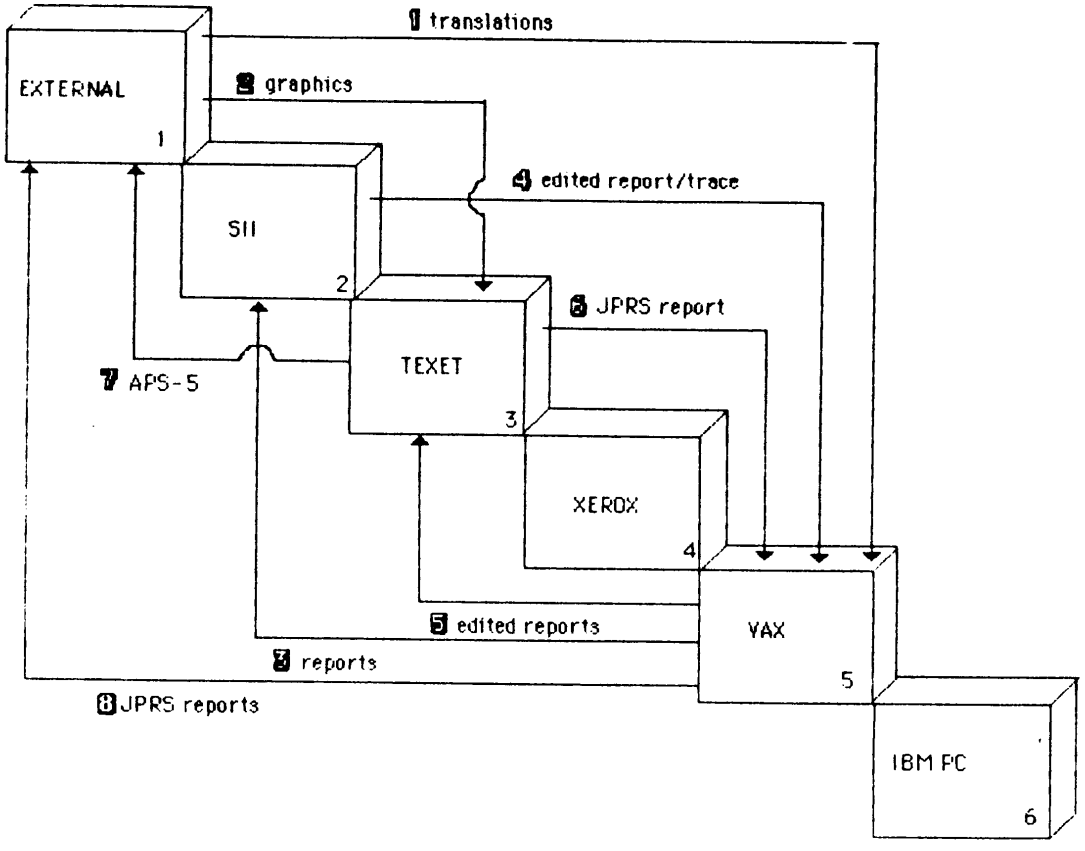

Declassified and Approved For Release 2012/05/31 : CIA-RDP88-00218R000300030001-0

Declassified and Approved For Release 2012/05/31 : CIA-RDP88-00218R000300030001-0

- OVERALL DESIGN
- DAILY OPERATIONS SUBSYSTEM
- TRANSLATION SERVICES SUBSYSTEM
- ----> ANALYTICAL SERVICES SUBSYSTEM
  - DETAILED BLOCK DIAGRAM
  - SIZING
  - INTERFACES
  - MAJOR DATA PATHS
- DESIGN SUMMARY
- OPERATIONS CONCEPT
- SUMMARY

Declassified and Approved For Release 2012/05/31 : CIA-RDP88-00218R000300030001-0

Declassified and Approved For Release 2012/05/31 : CIA-RDP88-00218R000300030001-0

ESL
A Subsidiary of TRW

ANALYTICAL SERVICES SUBSYSTEM

TRW

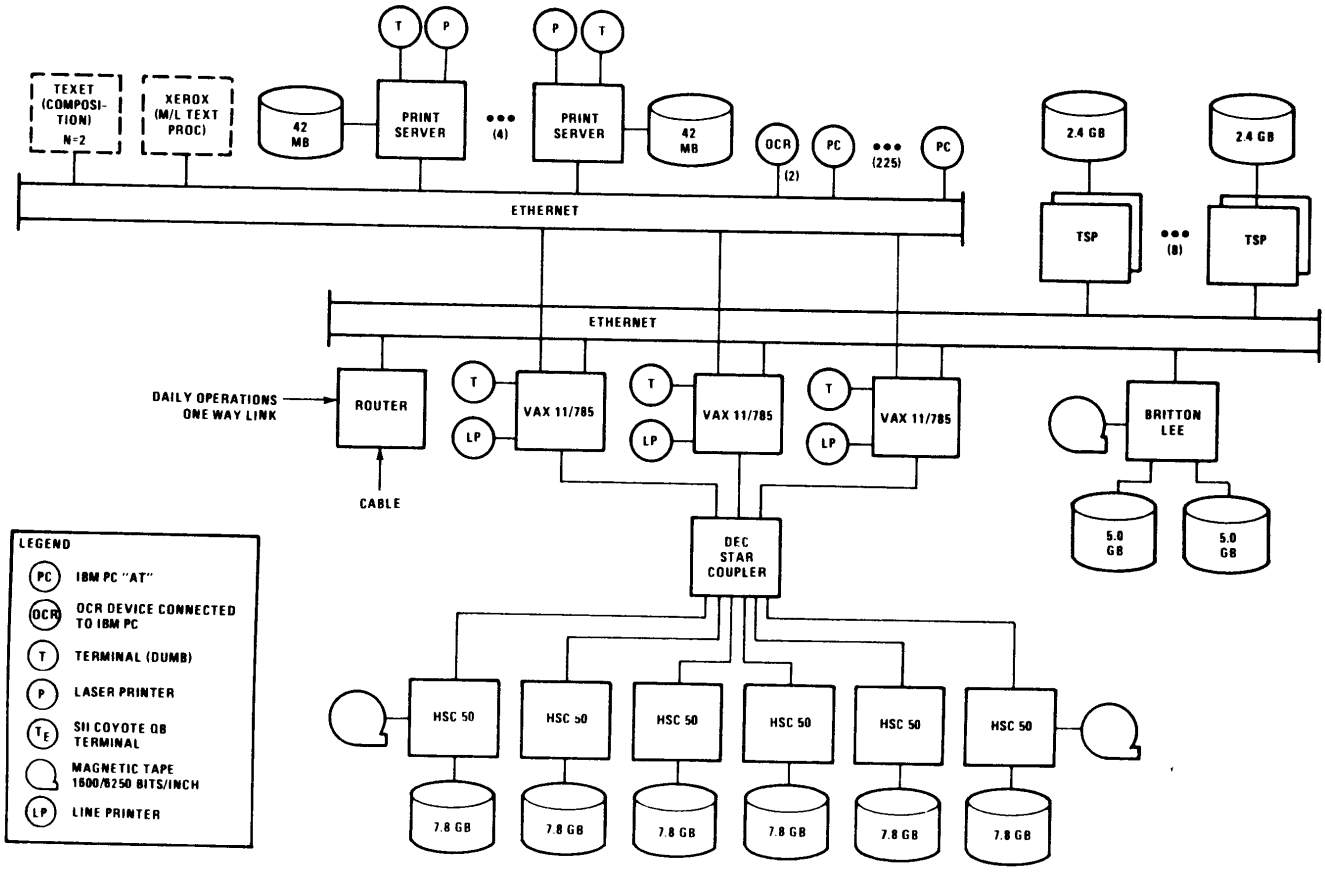

Declassified and Approved For Release 2012/05/31 : CIA-RDP88-00218R000300030001-0

Declassified and Approved For Release 2012/05/31 : CIA-RDP88-00218R000300030001-0

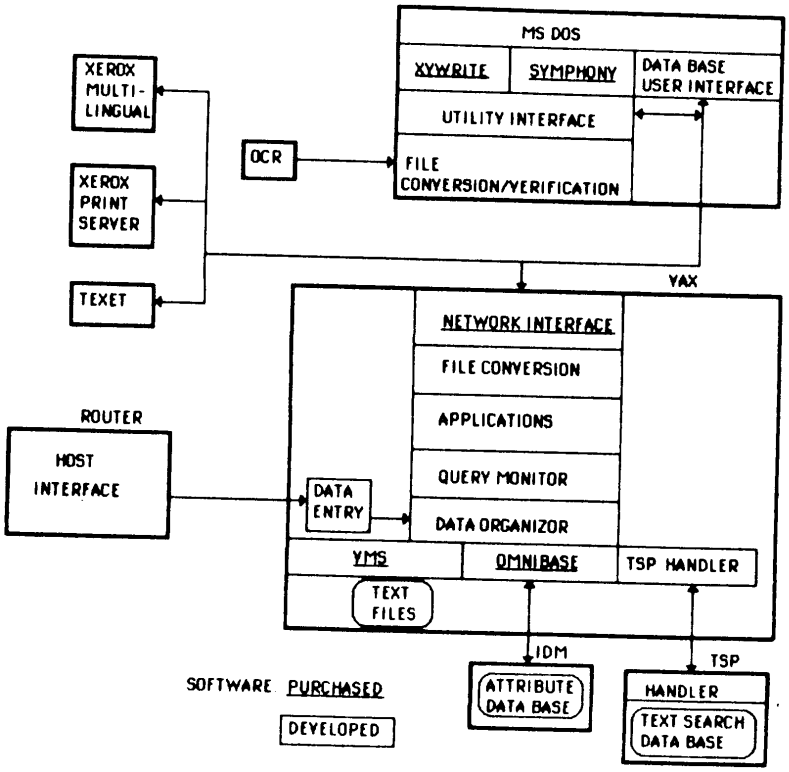

Declassified and Approved For Release 2012/05/31 : CIA-RDP88-00218R000300030001-0

Declassified and Approved For Release 2012/05/31 : CIA-RDP88-00218R000300030001-0

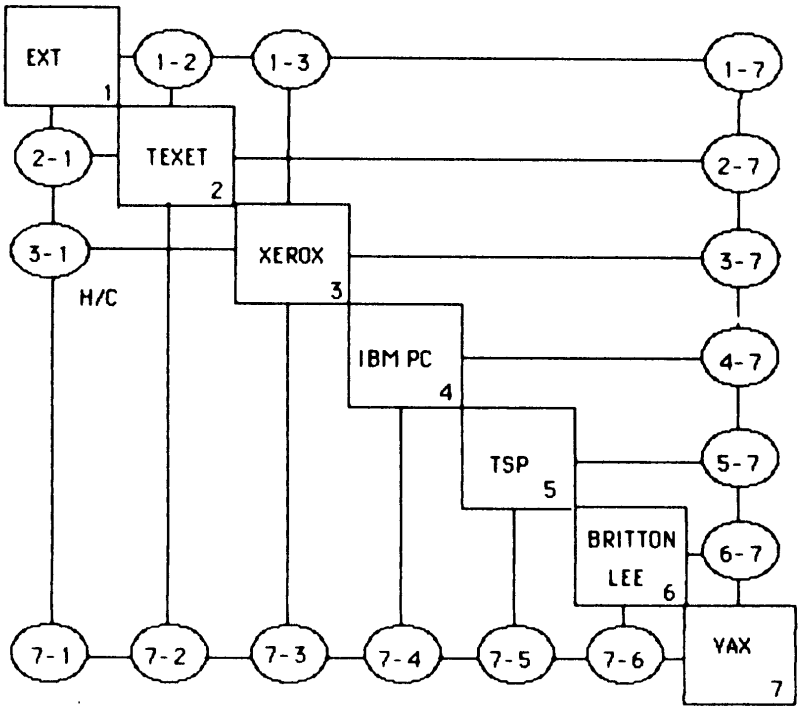

Declassified and Approved For Release 2012/05/31 : CIA-RDP88-00218R000300030001-0

Declassified and Approved For Release 2012/05/31 : CIA-RDP88-00218R000300030001-0

FBIS–ANALYTICAL SERVICES: TERMINAL SIZING

	Terminal Count		
	Old	New	Update Rational
Prod Analysis (includes 15 system support)	150	150	(based on information from previous briefing)
Analysis/Editors	45	52	
LRB	5	5	
MOD	10	10	
Engineering Division	5	5	
Reference Services	3	3	
	---	---	
	218	225	
Composition	2	2	
Multi-Lingual	2	2	
OCR	2	2	
Digitizer	2	2	

Declassified and Approved For Release 2012/05/31 : CIA-RDP88-00218R000300030001-0

Declassified and Approved For Release 2012/05/31 : CIA-RDP88-00218R000300030001-0

FBIS–ANALYTICAL SERVICES: DATA BASE SIZING

Button Lee double store for reliability only

- ATTRIBUTE STORAGE:
  - NUMBER OF ITEMS: 640,000 ITEMS INCREASE PER YEAR
    6,600,000 ITEMS TOTAL IN 10 YEARS
  - SIZE: 390 MEGABYTES INCREASE PER YEAR
    4000 MEGABYTES TOTAL IN 10 YEARS
  - INCLUDES CTS: 1,820,000 ITEMS TOTAL IN 10 YEARS
    2300 MEGABYTES TOTAL IN 10 YEARS
- TEXT STORAGE:
  - SIZE: 3500 MEGABYTES INCREASE PER YEAR
    39000 MEGABYTES TOTAL IN 10 YEARS
  - ASSUMES: A CONSERVATIVE 10 BYTES/ENGLISH WORD
    (4-8 BYTES/WORD IS A TYPICAL ESTIMATE)
- GRAPHICS STORAGE:
  - SIZE: 370 MEGABYTES INCREASE PER YEAR
    3744 MEGABYTES TOTAL IN 10 YEARS
  - ASSUMES: 150,000 BYTES PER GRAPHIC (ORIGINAL)
    10-TO-1 RUN LENGTH ENCODING COMPRESSION

Declassified and Approved For Release 2012/05/31 : CIA-RDP88-00218R000300030001-0

Declassified and Approved For Release 2012/05/31 : CIA-RDP88-00218R000300030001-0

ESL
A Subsidiary of TRW

FBIS–ANALYTICAL SERVICES: DATA BASE INPUT RATES

TRW

SOURCE INPUT TOTALS						DATA BASE INPUT TOTALS	
TO:	FROM:	Bytes /Month	Days /Week	Hours /Day	Bytes /Sec.	TO:	Bytes /Sec.
	INPUT FROM UNCLASSIFIED SYSTEM						
Orig. Text	Document	3.9E8	5	8	6.25E2	Orig. Text	7.11E2
	Message	1.3E8	7	24	4.96E1		
	Field Com.	2E7	7	24	7.63E0	Search Text (40%)	2.84E2
Graphics	Document	2.9E7	5	8	4.64E1	Graphics	4.95E1
Attribute	Document	2E6	5	8	3.2E0		
	Message	1E6	7	24	3.8E-1		
	Field Com.	6E5	7	24	2.2E-1		
	Ref. Aids	5E6	5	8	8.01E0	Attribute	4.97E1
	Pub. Sour.	5E5	5	8	8.E-1		
	Source	6E6	7	24	2.28E0		
	Distrib.	3E5	5	8	4.8E-1		
				Total	7.44E2		
	INPUT FROM CLASSIFIED WORKSTATIONS						
Orig. Text	Document	3.2E6	5	8	5.12E0		
	Research	1.8E6	5	8	2.88E0		
	F.L. Serv.	1.8E6	7	24	6.8E-1		
	Monthly	1E6	5	8	1.6E0		
Graphics	Document	1.9E6	5	8	3.04E0		
Attribute	Research	7E4	5	8	1.1E-1		
	F.L. Serv.	3E4	7	8	3.4E-2		
	Private	1E6	5	8	1.6E0		
				Total	1.5E1		
	INPUT FROM CLASSIFIED OTHER						
Orig. Text	Clas.Cable	4.9E7	7	24	1.86E1		
Attribute	Clas.Cable	1.4E6	7	24	5.3E-1		
	CTS	2E7	5	8	3.2E1		
				Total	5.12E1		

Declassified and Approved For Release 2012/05/31 : CIA-RDP88-00218R000300030001-0

Declassified and Approved For Release 2012/05/31 : CIA-RDP88-00218R000300030001-0

- ATTRIBUTE STORAGE
  - 4000 MB (x 2 FOR MIRRORED DISKS)
- ORIGINAL SOURCE TEXT STORAGE
  - 38000 MB
- TEXT PROCESSORS AND SEARCH STORAGE
  - 38000 MB @ 40% = 15200 MB COMPRESSED STORAGE
    @ 2400 MB/TSP = 6.3 ~ 7 TSP UNITS
  - 8 TSP UNITS = 16 AFP PROCESSORS
    (TO ALLOW FOR GROWTH)
- GRAPHICS STORAGE
  - 3740 MB

Declassified and Approved For Release 2012/05/31 : CIA-RDP88-00218R000300030001-0

Declassified and Approved For Release 2012/05/31 : CIA-RDP88-00218R000300030001-0

INTERFACE	MAJOR DATA PATH
1-2: EXTERNAL TO TEXET	HARDCOPY GRAPHICS
1-3: EXTERNAL TO XEROX	REFERENCE AIDS GLOSSARIES ITEMS FOR REVERSE TRANSLATION
1-7: EXTERNAL TO VAX	MESSAGE TRAFFIC FIELD COPY DAILY REPORTS JPRS REPORTS CSO UPDATES REFERENCE AIDS TECHNICAL FILE UPDATES DAILY REPORT OVERFLOW PROCESS STATISTICS CLASSIFIED CABLE
2-1: TEXET TO EXTERNAL	APS-5 COMMANDS (VIA CLASSIFIED LINK)
2-7: TEXET TO VAX	ANALYST REPORTS GRAPHICS

Declassified and Approved For Release 2012/05/31 : CIA-RDP88-00218R000300030001-0

Declassified and Approved For Release 2012/05/31 : CIA-RDP88-00218R000300030001-0

INTERFACE	MAJOR DATA PATH
3-1: XEROX TO EXTERNAL	HARDCOPY FOR PUBLICATION
3-7: XEROX TO VAX	REFERENCE AIDS GLOSSARIES MIXED LANGUAGE TEXT
4-7: IBM PC TO VAX	QUERIES REPORT TEXT RESEARCH FILE RECORDS FILE SPECIFICATIONS OCR TEXT FILES
5-7: TSP TO VAX	FILE SPECIFICATIONS
6-7: BRITTON LEE TO VAX	ATTRIBUTE INFORMATION FILE SPECIFICATIONS

Declassified and Approved For Release 2012/05/31 : CIA-RDP88-00218R000300030001-0

Declassified and Approved For Release 2012/05/31 : CIA-RDP88-00218R000300030001-0

INTERFACE	MAJOR DATA PATH
7-1: VAX TO EXTERNAL	CLASSIFIED CABLES
7-2: VAX TO TEXET	EDITED ANALYTICAL REPORTS GRAPHICS AND PARAMETERS
7-3: VAX TO XEROX	REFERENCE AIDS GLOSSARIES ITEMS FOR REVERSE TRANSLATION MISCELLANEOUS MIXED LANGUAGE TEXT
7-4: VAX TO IBM PC	HIT FILE LIST PRODUCT FILES PRIVATE FILES
7-5: VAX TO TSP	COMPRESSED TEXT FILES TEXT SEARCH QUERIES
7-6: VAX TO BRITTON LEE	ATTRIBUTE INFORMATION FILE SPECIFICATIONS ATTRIBUTE SEARCH QUERIES

Declassified and Approved For Release 2012/05/31 : CIA-RDP88-00218R000300030001-0

Declassified and Approved For Release 2012/05/31 : CIA-RDP88-00218R000300030001-0

ESL
A Subsidiary of TRW

ANALYTICAL SERVICE: QUERY DATA PATH

TRW

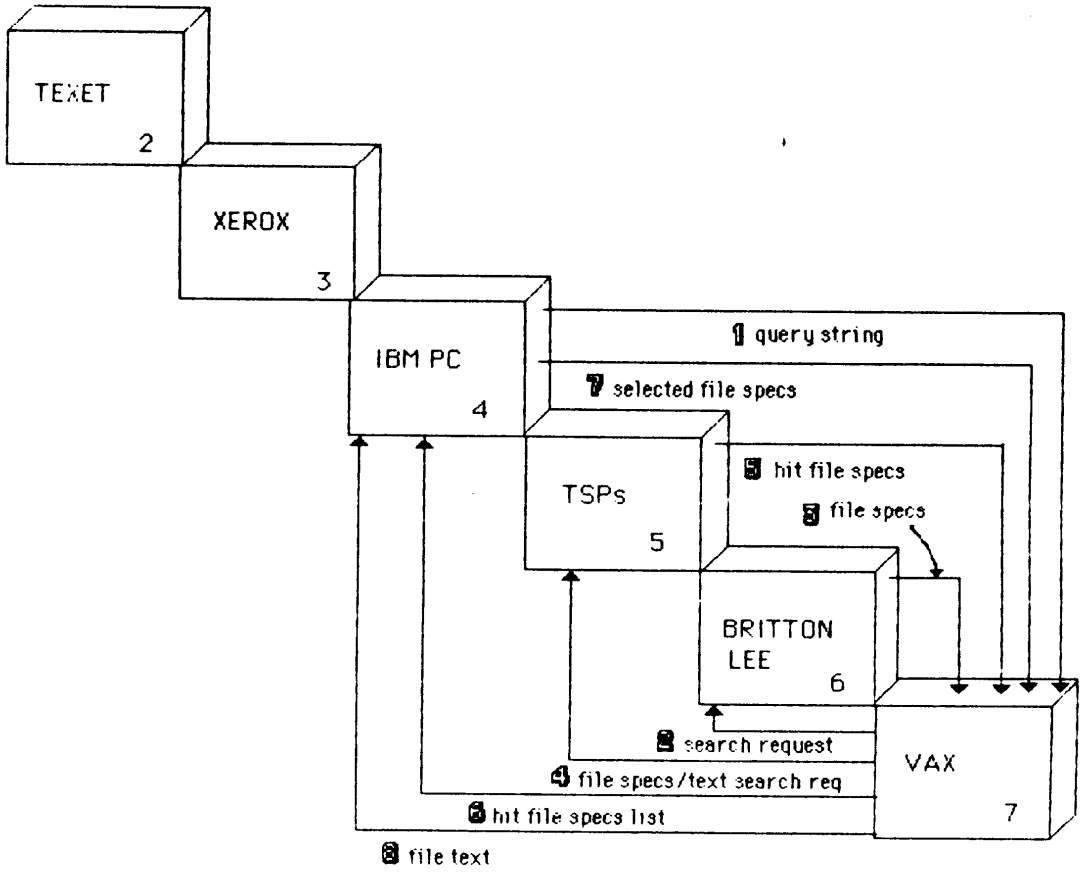

Declassified and Approved For Release 2012/05/31 : CIA-RDP88-00218R000300030001-0

Declassified and Approved For Release 2012/05/31 : CIA-RDP88-00218R000300030001-0

- OVERALL DESIGN
- DAILY OPERATIONS SUBSYSTEM
- TRANSLATION SERVICES SUBSYSTEM
- ANALYTICAL SERVICES SUBSYSTEM
- ----> DESIGN SUMMARY
  - HARDWARE AND PURCHASED SOFTWARE
  - SOFTWARE DEVELOPMENT
- OPERATIONS CONCEPT
- SUMMARY

Declassified and Approved For Release 2012/05/31 : CIA-RDP88-00218R000300030001-0

Declassified and Approved For Release 2012/05/31 : CIA-RDP88-00218R000300030001-0

OM Vendor	Equipment Subsystem	Component	Translation Services Number	Daily Operations Number	Analytical Services Number
Access	XNS for DEC	Front end	2	2	4
DEST	OCR	Model 213	5	2	2
Xerox	Multi-Ling. (standard)	Star 8014 (1)	2	2	
	(tempest)	Star 8014 (1)			2
	Print Server (tempest)	Server 8046			4
	(standard)	Server8046	2	2	
Data-Fusion	TSP	PDP-11 (1) AFP (2) Disk contr.(2) Disk (2x300MB) Disk (6x300MB) Total			8

Declassified and Approved For Release 2012/05/31 : CIA-RDP88-00218R000300030001-0

Declassified and Approved For Release 2012/05/31 : CIA-RDP88-00218R000300030001-0

Vendor	Equipment Subsystem	Component	Translation Services Number	Daily Operations Number	Analytical Services Number
Britton Lee	IDM 500/2	Proc. (2) Memory (2 MB) Disk contr.(1)			
	Options	Memory (4 MB) Disk contr.(3) Tape contr.(1) Mirrored disk Ethernet Tape drive (2)			
	Install.	Total			1
	Disk	Disk (1x621MB)			16
	Software	Omnibase (3)			1
RTI					
	Ingres	Rel. DBMS	1	1	

Declassified and Approved For Release 2012/05/31 : CIA-RDP88-00218R000300030001-0

Declassified and Approved For Release 2012/05/31 : CIA-RDP88-00218R000300030001-0

Vendor	Equipment Subsystem	Component	Translation Services Number	Daily Operations Number	Analytical Services Number
DEC					
	VAX 11/785	VAX 11/785 (1)			
	VAXcluster (first)	Memory (4MB)			
		StarCoupler(1)			
		HSC50 Contr(1)			
		Disk I/F (1)			
		VMS license(1)			
		DECnet lic.(1)			
		DZ11-DP I/F(1)			
		LA120 Cons.(1)			
		Total			1
	(upgrade)	VAX 11/785 (1)			
		Memory (4MB)			
		VMS lic.(1)			
		DECnet lic.(1)			
		DZ11-DP I/F(1)	1	1	
		DA120 Cons.(1)	1	1	
		Total			2
	Options	Fl. Point			3
	Disk farm	HSC50 Contr(1)			5
		Disk I/F (1)			29
		Power supply			6
		Disk (3x456MB, in cabinet)			34
	Tape drives	TU78-16/62(2)	1	1	2
	Ethernet	Router	1	1	1
	Line Print.	LP11-EB 600L/M	1	1	3
	Power	Power Control	1	1	3

Declassified and Approved For Release 2012/05/31 : CIA-RDP88-00218R000300030001-0

Declassified and Approved For Release 2012/05/31 : CIA-RDP88-00218R000300030001-0

Vendor	Equipment Subsystem	Component	Translation Services Number	Daily Operations Number	Analytical Services Number
DEC (continued)					
	VAX 11/785	VAX 11/785 (1)			
		Memory (2MB)			
		VMS License(1)	1		
	VAX 11/750	VAX 11/750 (1)			
		Memory (2MB)			
		VMS License(1)		1	
	Memory	Memory (2MB)	1	1	
	Disk	UDA50 Contr.	1	1	
		Disk (2x456MB)	1	1	
	Software	Lang.,DECnet	1	1	3
		VMS Distrib.	0	1	1
IBM					
	PC (standard)				
		PC-AT			
		Mono. Display			
		Network Adapt.			
		Display Adapt.			
		Graphics Adapt.			
		Cable			
		DOS 3.1			
		Network S/W			
		XyWrite S/W			
		Symphony S/W			
		Total	43	16	
	(TEMPEST)				
		PC-AT			
		Mono. Display			
		(same other)			
		Total			225
	Multi- Lingual				
		ECI H/W+S/W	2	2	2

Declassified and Approved For Release 2012/05/31 : CIA-RDP88-00218R000300030001-0

Declassified and Approved For Release 2012/05/31 : CIA-RDP88-00218R000300030001-0

Vendor	Equipment Subsystem	Component	Translation Services Number	Daily Operations Number	Analytical Services Number
Texet	Composition	LP9000: Disk(1x167MB) Hi-res screen Terminal	5	3	2
		Software	1	1	1
		IL 900 Contr.	1	1	1
		Lan	1	1	1
		Laser Print.	1	1	1
		Typesetter	1	1	1
		Scanner	2	2	2
Analytic	Autodin Interface	TLC-100	1		

Declassified and Approved For Release 2012/05/31 : CIA-RDP88-00218R000300030001-0

Declassified and Approved For Release 2012/05/31 : CIA-RDP88-00218R000300030001-0

FBIS–HARDWARE AND PURCHASED SOFTWARE (CONT'D)

Vendor	Equipment Subsystem	Component	Translation Services Number	Daily Operations Number	Analytical Services Number
SII	Hardware				
		TXP Proc.	2		2
		TXP Microcode	2		2
		Memory (2MB)	4		4
		Cabinet	1		1
		Patch Pan.Cab.	2		2
		Power Module	3		3
		O&S Proc.	1		1
		6530 Terminal	1		1
		Disk (1x300MB)	10		6
		Disk contr.	6		4
		Disk patch pan	3		2
		Tape (tri d)	2		2
		Tape contr.	2		2
		Line printer	1		1
		Printer contr.	1		1
		Modem package	1		1
		Term.(Coyote)	31		50
		Fault Tol.Mod.	4		8
		UCI Adapter			4
		U. Patch Panel			2
		Byte S. Contr.			2
		Synch.Pat.Pan.			1
		Async Contr.			1
		Async Pat.Pan.			1
	Software				
		Wire Service			1
		Mapgen			2
		Spellbinder	1		1
		Word Proc.	1		1
		Edit Trace	1		1

Declassified and Approved For Release 2012/05/31 : CIA-RDP88-00218R000300030001-0

Declassified and Approved For Release 2012/05/31 : CIA-RDP88-00218R000300030001-0

CPCI	SOFTWARE CPC	FUNCTION	LINES OF CODE: FUNCTION	CPC	HOST PROC.
DATA BASE SERVICES					
	DATA ENTRY				VAX
		TEXT			
		REFORMATTING	300		
		STORAGE	400		
		COMPRESSION	1000		
		EXTRACTION	1200		
		LOGGING	200		
		ATTRIBUTE			
		REFORMATTING	600		
		STORAGE	200		
		GRAPHICS			
		REFORMATTING	200		
		RUN-LENGTH ENCOD.	200		
		STORAGE	200	4500	
	DATA RETRIEVAL				VAX
		TEXT	200		
		ATTRIBUTE	800		
		GRAPHICS	200	1200	
	QUERY MONITOR				VAX
		PARSING	800		
		TRANSLATION			
		TEXT SEARCH	400		
		ATTRIBUTE	400		
		STEP-BY-STEP			

Declassified and Approved For Release 2012/05/31 : CIA-RDP88-00218R000300030001-0

Declassified and Approved For Release 2012/05/31 : CIA-RDP88-00218R000300030001-0

CPCI	Software CPC	Function	Lines of Code: Function	CPC	Host Proc.
		Management	1200	2800	
Data Base Services (continued)					
	Data Organizer				VAX
		Original Text	600		
		Search Text	1000		
		Attribute	500	2100	
	Application Software				VAX
		Applic. Mgmt.	1200		
		Report Gen.	1200	2400	
	Utility Interface				IBM PC
		Spreadsheet	400		
		Business Graphics	400	800	
	Device Handler				
		Datafusion TSP	1200		VAX
		Datafusion TSP	2400	3600	TSP

Declassified and Approved For Release 2012/05/31 : CIA-RDP88-00218R000300030001-0

Declassified and Approved For Release 2012/05/31 : CIA-RDP88-00218R000300030001-0

FBIS–SOFTWARE DEVELOPMENT (CONT'D)

CPCI	SOFTWARE CPC	FUNCTION	LINES OF CODE: FUNCTION	CPC	HOST PROC.
COMMUNI-CATION					
	NETWORK I/F & MGMT.				
		IBM PC	600		IBM PC
		VAX	1000	1600	
	AUTODIN INTERFACE				
			800	800	SII
	WIRE SERVICE				
			800	800	SII
	HOST INTERFACE				
		ROUTER SEND	300		ROUTER
		ROUTER RECEIVE	300	600	ROUTER
	FILE CONVERSION				
		AUTODIN/SII	400		SII
		TEXT			
		IBM PC/VAX	600		VAX
		TEXT			
		GRAPHICS			
		SII/VAX			VAX
		TEXT	800	800	
		XEROX/VAX	600		VAX
		TEXT			
		GRAPHICS			
		TEXET/VAX	600		VAX
		TEXT			
		GRAPHICS			
		OCR/IBM PC	400		IBM PC
		TEXT		2600	

Declassified and Approved For Release 2012/05/31 : CIA-RDP88-00218R000300030001-0

Declassified and Approved For Release 2012/05/31 : CIA-RDP88-00218R000300030001-0

FBIS–SOFTWARE DEVELOPMENT (CONT'D)

CPCI	SOFTWARE CPC	FUNCTION	LINES OF CODE: FUNCTION	CPC	HOST PROC.
USER INTERFACE					
	GENERAL				IBM PC
		FORMS I/F VALIDATION DBMS I/F			
	DATA BASE SERVICES			1200	
		QUERY	1000		
		BROWSE	600		
		REPORT	400		
		GRAPHICS	800	2800	
	MT&C				
		GENERAL	1200		
		IC	600		
				1800	
OVERALL	TOTAL:			30400	

doesn't include file structures & product data base

Declassified and Approved For Release 2012/05/31 : CIA-RDP88-00218R000300030001-0

Declassified and Approved For Release 2012/05/31 : CIA-RDP88-00218R000300030001-0

- o OVERALL DESIGN
- o DAILY OPERATIONS SUBSYSTEM
- o TRANSLATION SERVICES SUBSYSTEM
- o ANALYTICAL SERVICES SUBSYSTEM
- o DESIGN SUMMARY
- ----> o OPERATIONS CONCEPT
  - PROCESS FLOWS AND FEATURES
- o SUMMARY

Declassified and Approved For Release 2012/05/31 : CIA-RDP88-00218R000300030001-0

Declassified and Approved For Release 2012/05/31 : CIA-RDP88-00218R000300030001-0

ESL
A Subsidiary of TRW

FBIS–WIRE SERVICE PROCESS FLOW

TRW

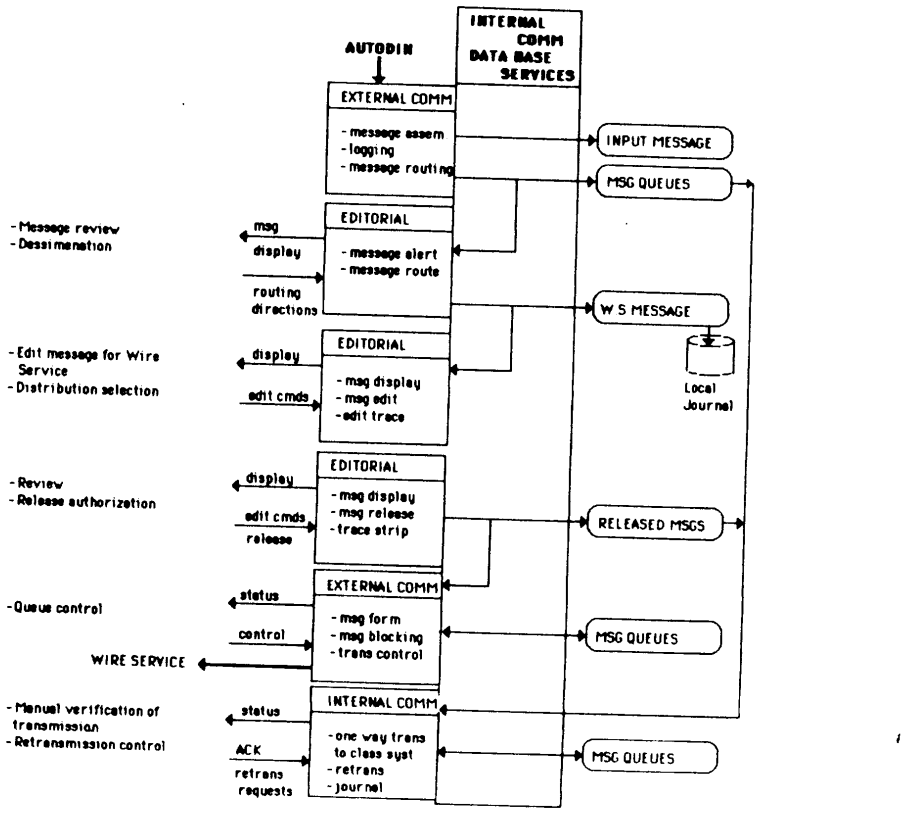

Declassified and Approved For Release 2012/05/31 : CIA-RDP88-00218R000300030001-0

Declassified and Approved For Release 2012/05/31 : CIA-RDP88-00218R000300030001-0

FBIS–PROCESS HIGHLIGHTS: WIRE SERVICE

- MESSAGE DISSEMINATION IS IMMEDIATE
  USING INTERNAL COMMUNICATIONS CAPABILITY
- MESSAGE FORMULATION, EDIT, AND AUTHORIZED RELEASE
  CYCLE IS EXPEDITED THROUGH ELECTRONIC MAIL
- INTERNAL COMMUNICATION IS A ONE-WAY LINK
  INTO THE CLASSIFIED ANALYTICAL SERVICE SUBSYSTEM

Declassified and Approved For Release 2012/05/31 : CIA-RDP88-00218R000300030001-0

Declassified and Approved For Release 2012/05/31 : CIA-RDP88-00218R000300030001-0

FBIS–DAILY REPORT PROCESS FLOW

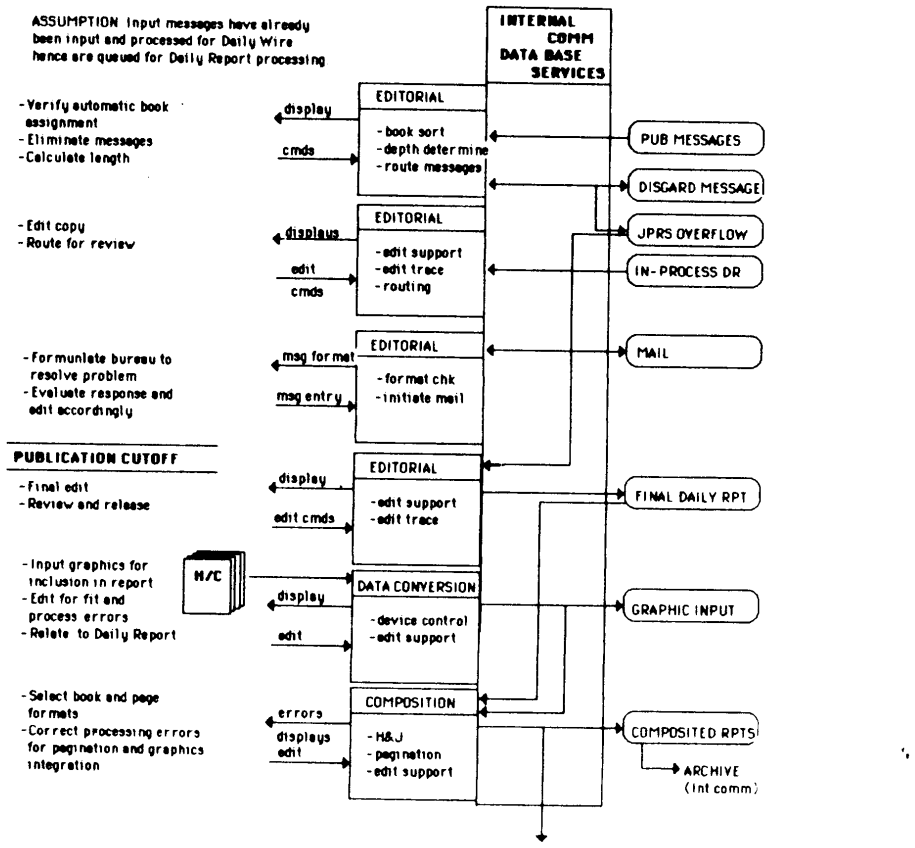

Declassified and Approved For Release 2012/05/31 : CIA-RDP88-00218R000300030001-0

Declassified and Approved For Release 2012/05/31 : CIA-RDP88-00218R000300030001-0

FBIS–DAILY REPORT PROCESS FLOW (CONT'D)

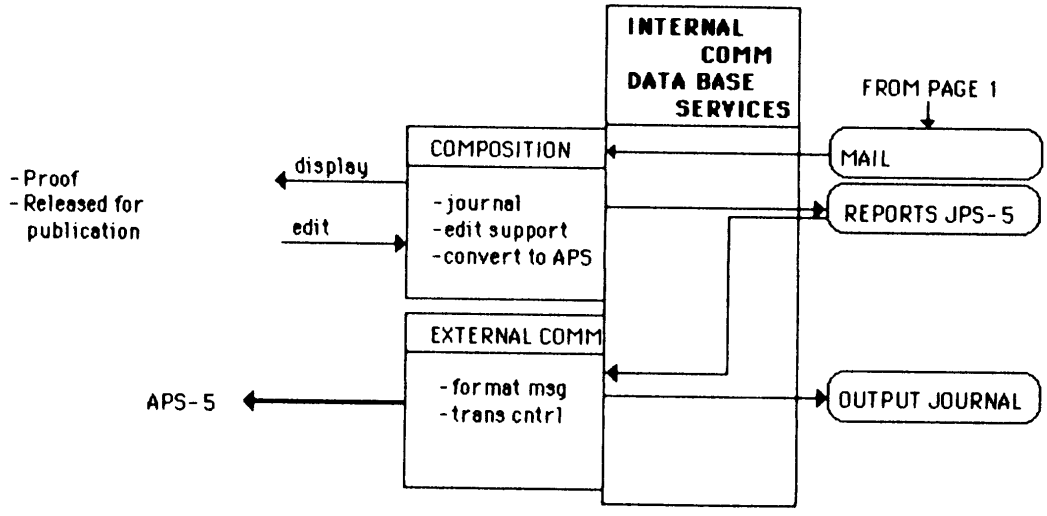

Declassified and Approved For Release 2012/05/31 : CIA-RDP88-00218R000300030001-0

Declassified and Approved For Release 2012/05/31 : CIA-RDP88-00218R000300030001-0

- ALL BOOKS ARE AUTOMATED UNDER A SINGLE OPERATIONAL PROCEDURE
- EDITORIAL ACTIVITIES ARE SEPARATED FROM COMPOSITION ACTIVITIES
- SCANNED GRAPHICS AND TEXT ARE MERGED DURING COMPOSITION

Declassified and Approved For Release 2012/05/31 : CIA-RDP88-00218R000300030001-0

Declassified and Approved For Release 2012/05/31 : CIA-RDP88-00218R000300030001-0

ESL
A Subsidiary of TRW

FBIS–SOURCE EVALUATION PROCESS FLOW

TRW

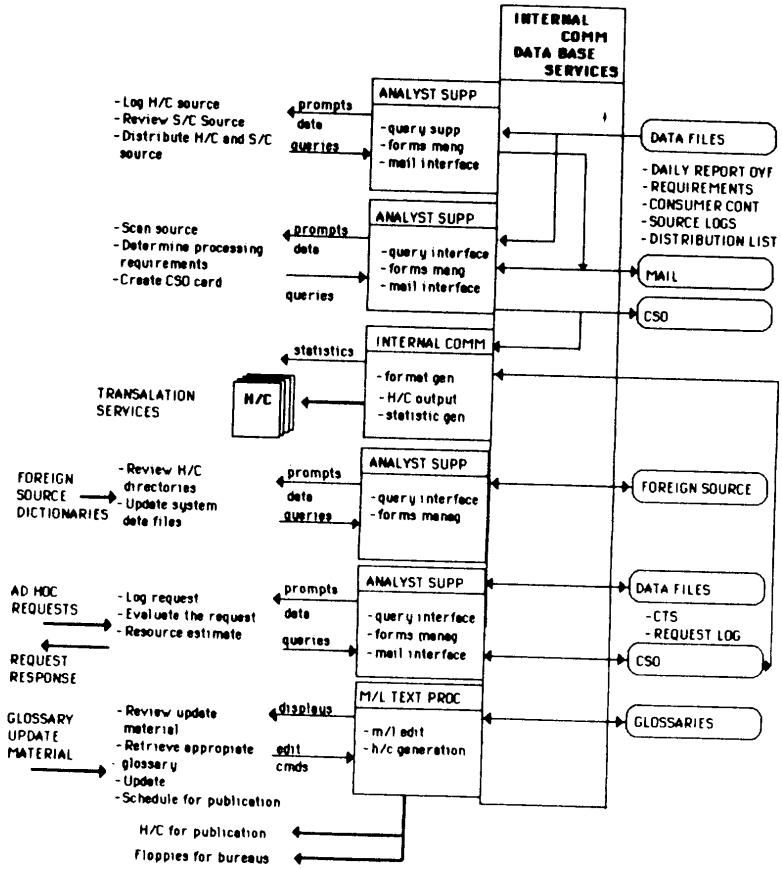

Declassified and Approved For Release 2012/05/31 : CIA-RDP88-00218R000300030001-0

Declassified and Approved For Release 2012/05/31 : CIA-RDP88-00218R000300030001-0

FBIS–PROCESS HIGHLIGHTS: SOURCE EVALUATION

- SEMI-AUTOMATED CSO CARD INTERFACE
- GLOSSARIES MAINTAINED ON UNCLASSIFIED DAILY OPERATIONS SUBSYSTEM

Declassified and Approved For Release 2012/05/31 : CIA-RDP88-00218R000300030001-0

Declassified and Approved For Release 2012/05/31 : CIA-RDP88-00218R000300030001-0

ESL
A Subsidiary of TRW

FBIS–SOURCE TRANSLATION PROCESS FLOW

TRW

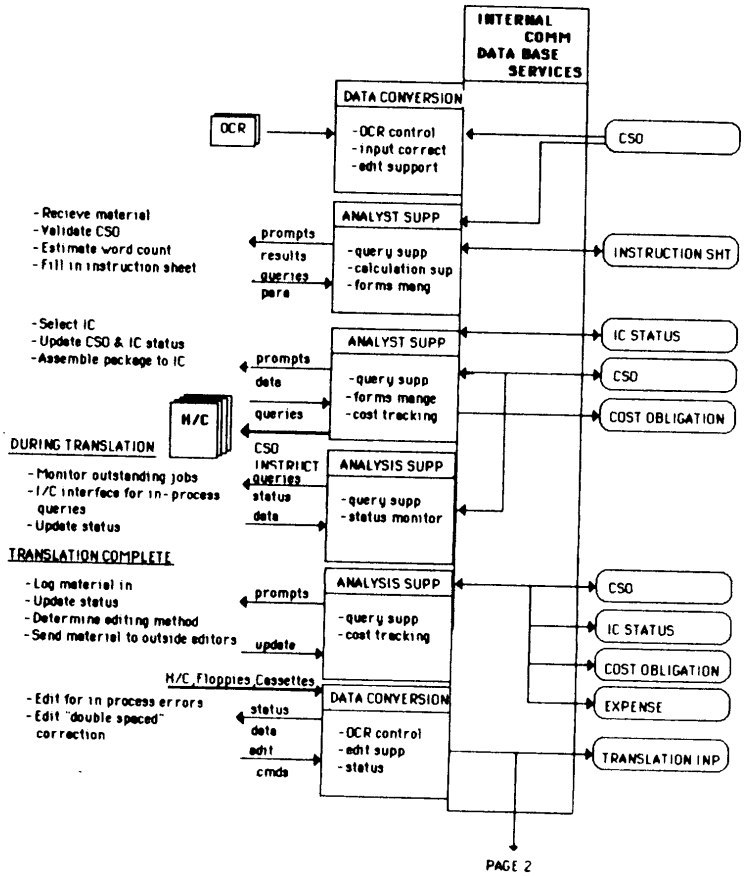

Declassified and Approved For Release 2012/05/31 : CIA-RDP88-00218R000300030001-0

Declassified and Approved For Release 2012/05/31 : CIA-RDP88-00218R000300030001-0

FBIS–SOURCE TRANSLATION PROCESS FLOW (CONT'D)

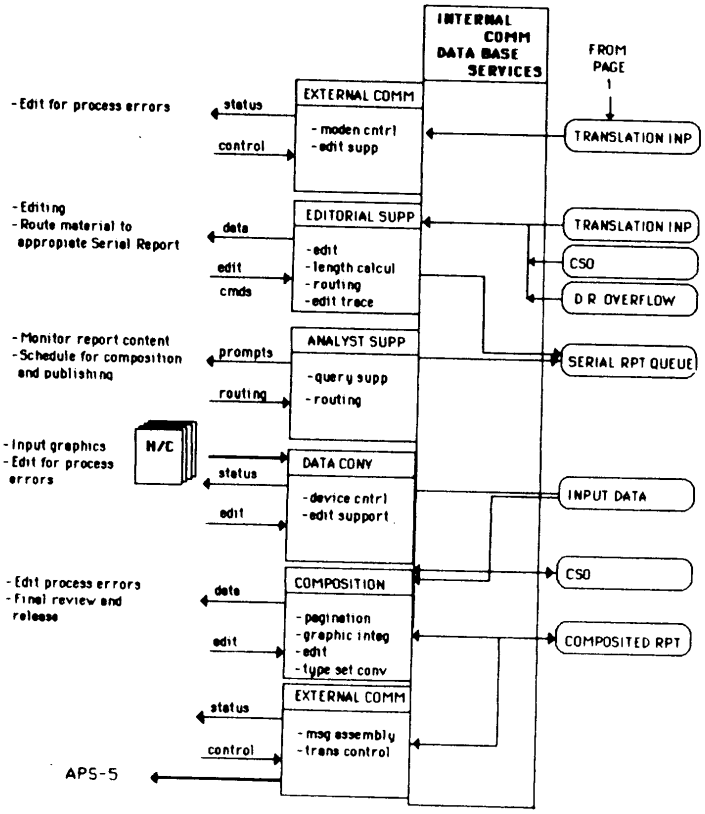

Declassified and Approved For Release 2012/05/31 : CIA-RDP88-00218R000300030001-0

Declassified and Approved For Release 2012/05/31 : CIA-RDP88-00218R000300030001-0

- CANDIDATE INDEPENDENT CONTRACTORS ARE INITIALLY NOMINATED BY MATCHING THE JOB REQUIREMENT PROFILE WITH THE IC PERSONNEL FILE
- PROPOSED BUDGET AND SCHEDULE ESTIMATES ARE CALCULATED AUTOMATICALLY BASED ON WORD CONTENT AND IC CONTRACT PARAMETERS
- JOB STATUS CHECK IS COMPUTER-AIDED
- TRANSLATED ITEMS UTILIZE FBIS EDITORIAL AND COMPOSITION RESOURCES

Declassified and Approved For Release 2012/05/31 : CIA-RDP88-00218R000300030001-0

Declassified and Approved For Release 2012/05/31 : CIA-RDP88-00218R000300030001-0

FBIS–RESEARCH PROCESS FLOW

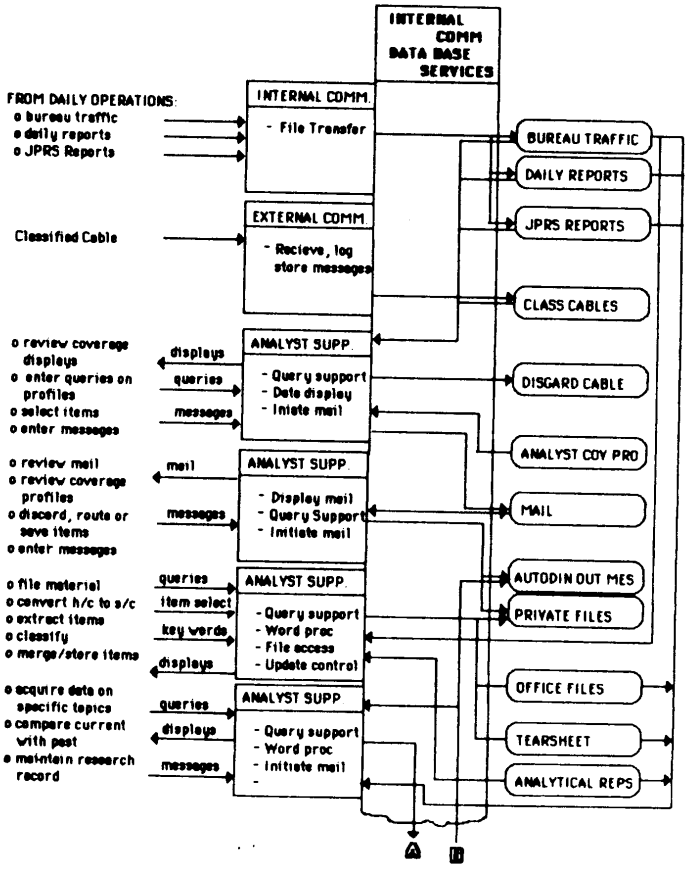

Declassified and Approved For Release 2012/05/31 : CIA-RDP88-00218R000300030001-0

Declassified and Approved For Release 2012/05/31 : CIA-RDP88-00218R000300030001-0

FBIS–RESEARCH PROCESS FLOW

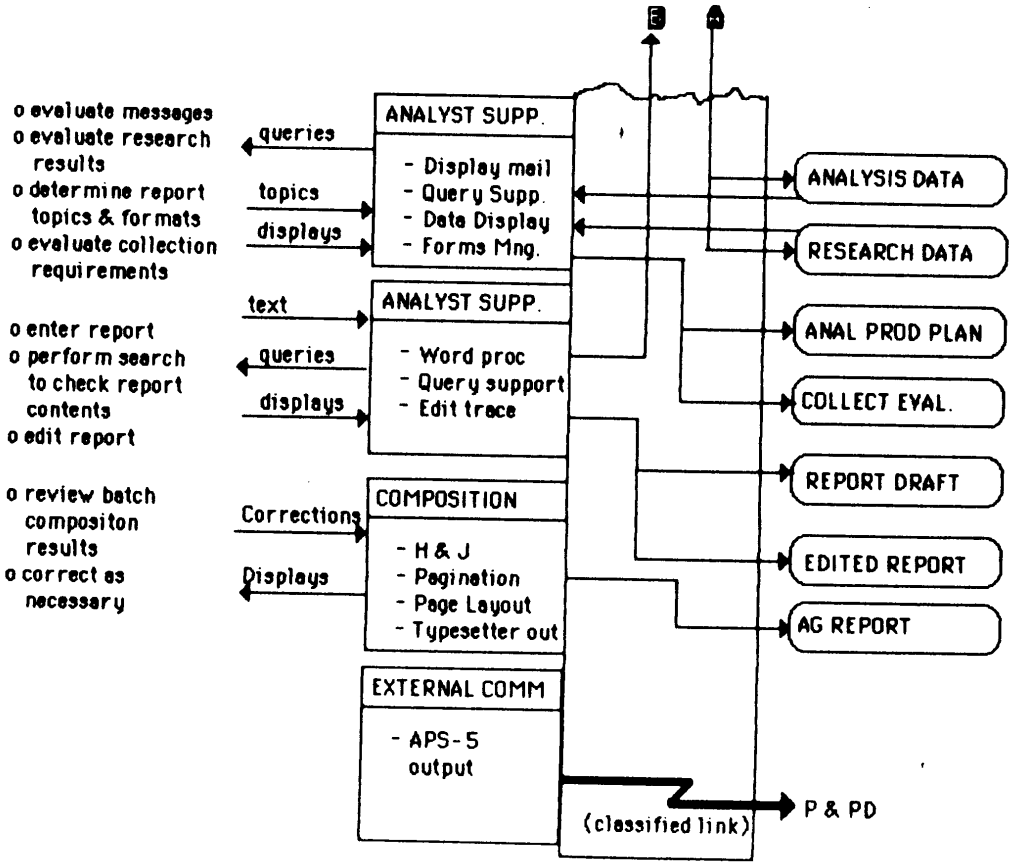

Declassified and Approved For Release 2012/05/31 : CIA-RDP88-00218R000300030001-0

Declassified and Approved For Release 2012/05/31 : CIA-RDP88-00218R000300030001-0

FBIS–PROCESS HIGHLIGHTS: RESEARCH SERVICES

- RESEARCH STAFF CONSTRUCT THE CENTRAL OFFICE FILE WITH THE COMPUTER-AIDED KEYING TOOLS
- CENTRAL OFFICE FILES ARE KEYED TO A SINGLE SOURCE MATERIAL DATA BASE
- FULL TEXT SEARCHES ARE PERFORMED AGAINST THE SOURCE MATERIAL DATA

Declassified and Approved For Release 2012/05/31 : CIA-RDP88-00218R000300030001-0

Declassified and Approved For Release 2012/05/31 : CIA-RDP88-00218R000300030001-0

FBIS–TECHNICAL FILE UPDATE PROCESS FLOW

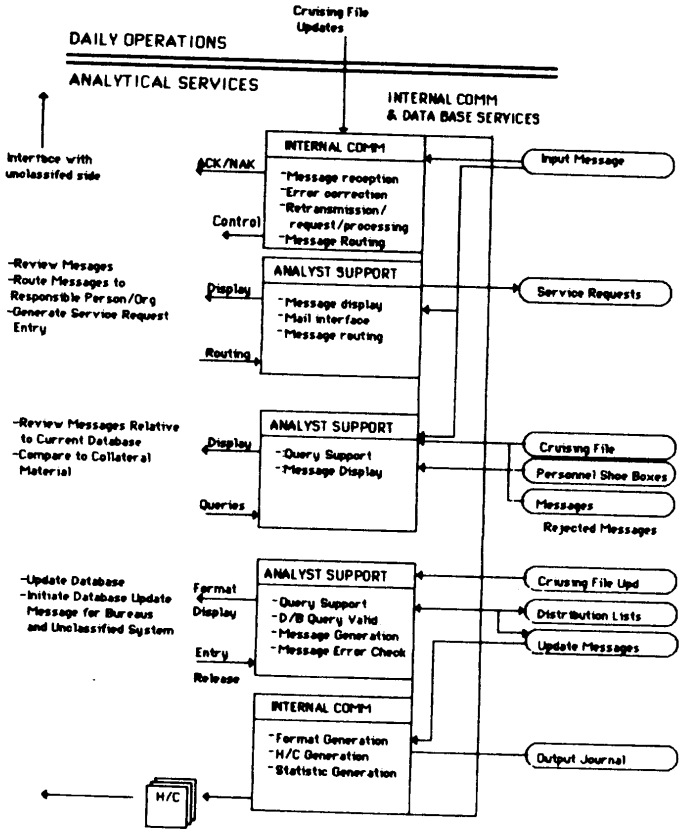

Declassified and Approved For Release 2012/05/31 : CIA-RDP88-00218R000300030001-0

Declassified and Approved For Release 2012/05/31 : CIA-RDP88-00218R000300030001-0

- THE DISSEMINATION OF ENGINEERING MESSAGES THROUGH THE INTERNAL COMMUNICATIONS NETWORK OF HEADQUARTERS SUPPORTS THE TIMELY NOTIFICATION OF CHANGES

- CRUISING AND COVERAGE SCHEDULES RELECT A COMPLETE COMMON DATA BASE MAINTAINED AND CONTROLLED AT HEADQUARTERS

Declassified and Approved For Release 2012/05/31 : CIA-RDP88-00218R000300030001-0

Declassified and Approved For Release 2012/05/31 : CIA-RDP88-00218R000300030001-0

ESL
A Subsidiary of TRW

FBIS–PROCESSING REQUEST PROCESS FLOW (1 OF 4)

TRW

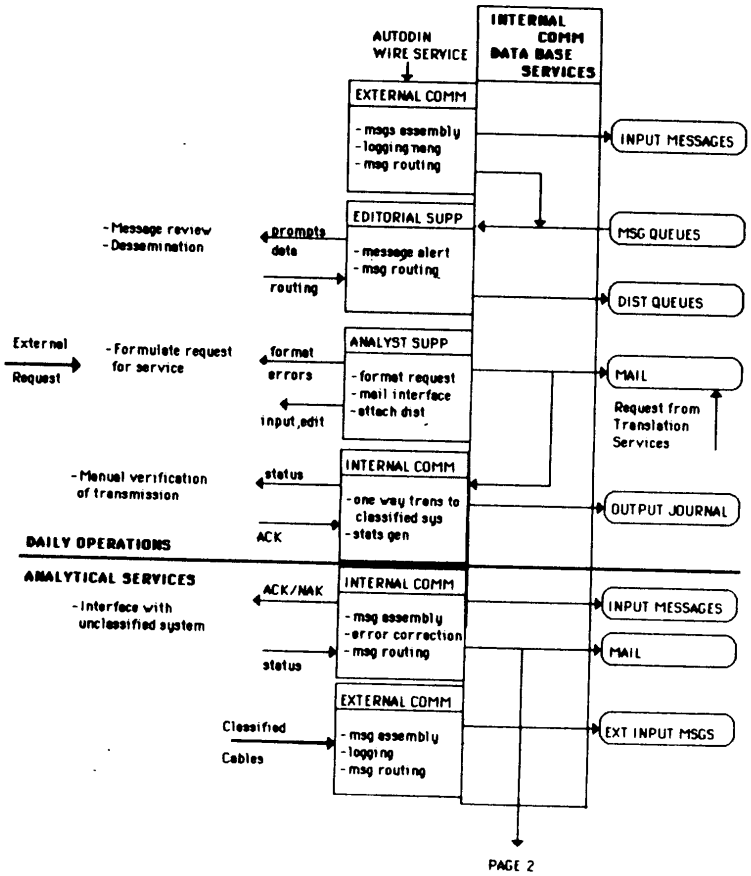

Declassified and Approved For Release 2012/05/31 : CIA-RDP88-00218R000300030001-0

Declassified and Approved For Release 2012/05/31 : CIA-RDP88-00218R000300030001-0

FBIS–PROCESSING REQUEST PROCESS FLOW (2 OF 4)

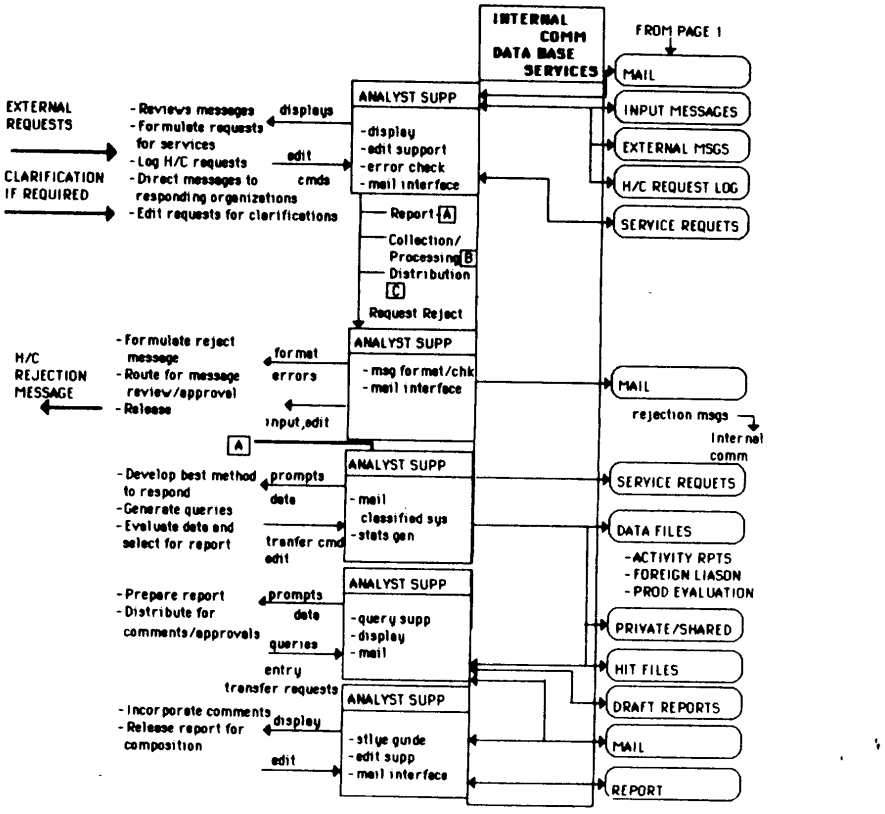

Declassified and Approved For Release 2012/05/31 : CIA-RDP88-00218R000300030001-0

Declassified and Approved For Release 2012/05/31 : CIA-RDP88-00218R000300030001-0

FBIS PROCESSING REQUEST PROCESS FLOW (3 OF 4)

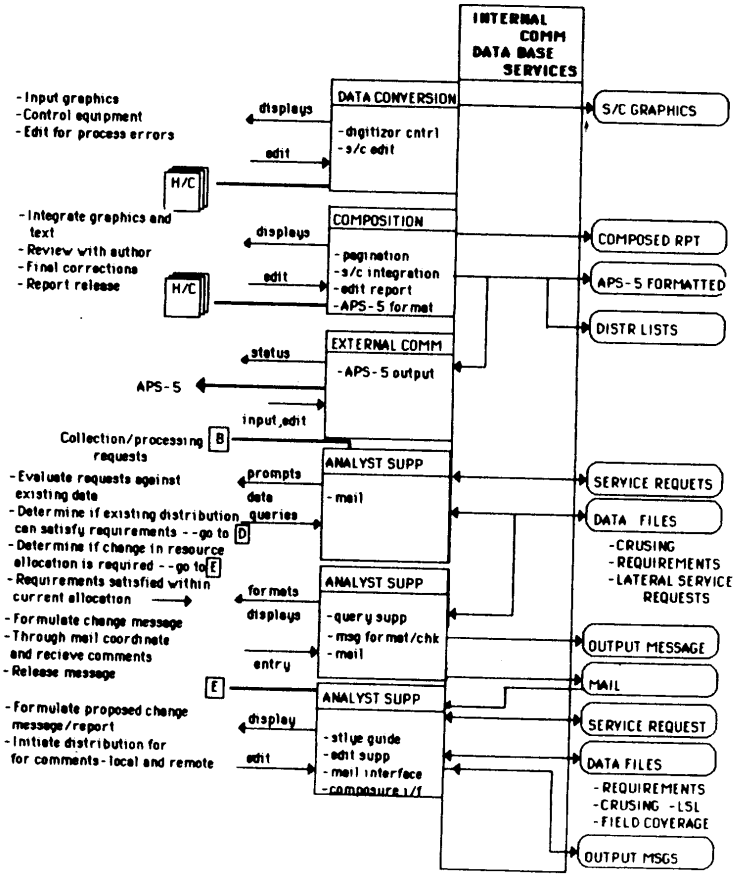

Declassified and Approved For Release 2012/05/31 : CIA-RDP88-00218R000300030001-0

Declassified and Approved For Release 2012/05/31 : CIA-RDP88-00218R000300030001-0

FBIS–PROCESSING REQUEST PROCESS FLOW (4 OF 4)

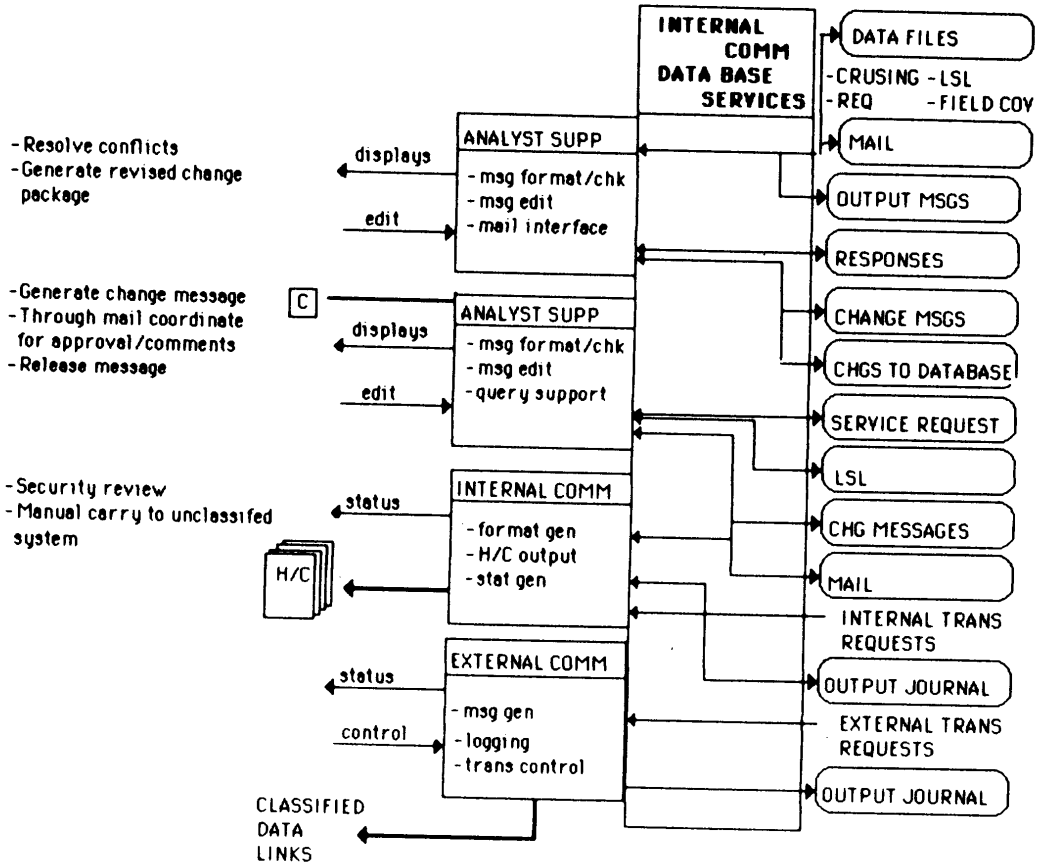

Declassified and Approved For Release 2012/05/31 : CIA-RDP88-00218R000300030001-0

Declassified and Approved For Release 2012/05/31 : CIA-RDP88-00218R000300030001-0

FBIS–PROCESS HIGHLIGHTS: REQUESTED SERVICES

- SERVICE REQUESTS, JOB TRACKING, AND CONSUMER REQUIREMENTS ARE COORDINATED VIA MAIL SERVICE
- SERVICE REQUESTS ARE REVIEWED AND DISPOSTION NOTIFIED IN A TIMELY FASHION
- SERVICES LISTS ARE CONTROLLED AND MAINTAINED FROM A COMMON DATA BASE AND DISTRIBUTED THROUGH EXTERNAL COMMUNICATION TO THE FIELD BUREAUS

Declassified and Approved For Release 2012/05/31 : CIA-RDP88-00218R000300030001-0

Declassified and Approved For Release 2012/05/31 : CIA-RDP88-00218R000300030001-0

FBIS–ADMINSTRATION DATA PROCESS FLOW

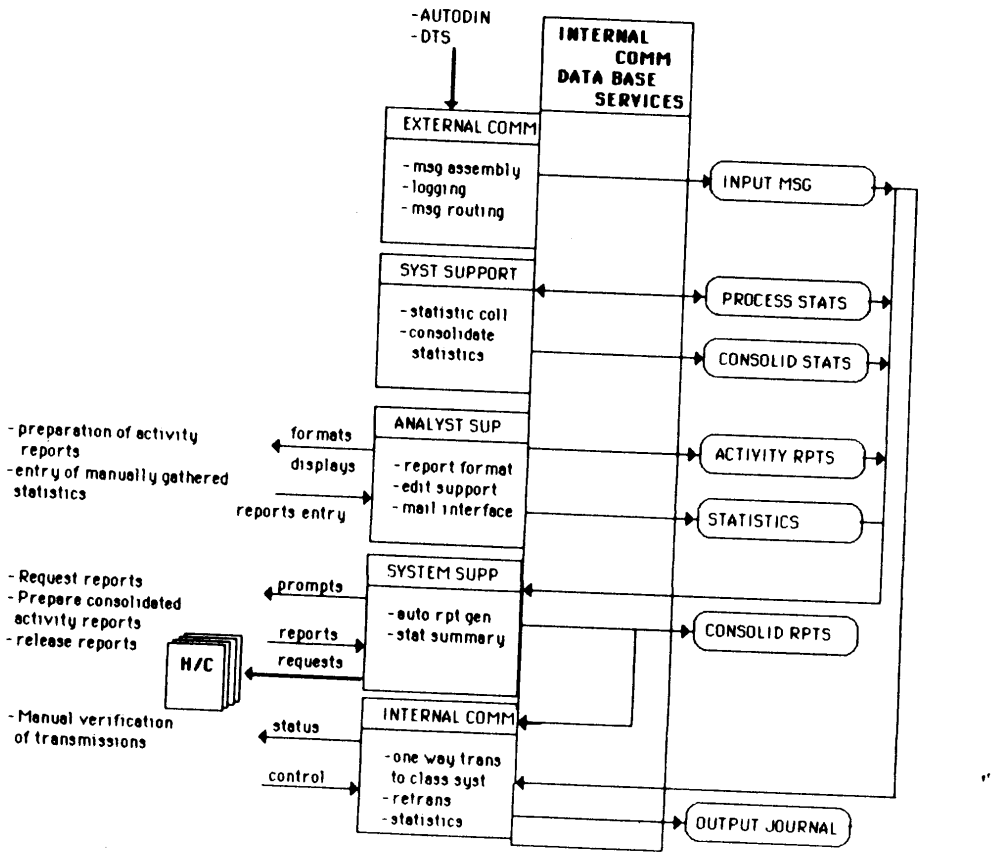

Declassified and Approved For Release 2012/05/31 : CIA-RDP88-00218R000300030001-0

Declassified and Approved For Release 2012/05/31 : CIA-RDP88-00218R000300030001-0

FBIS–ADMINSTRATION DATA PROCESS FLOW (CONT'D)

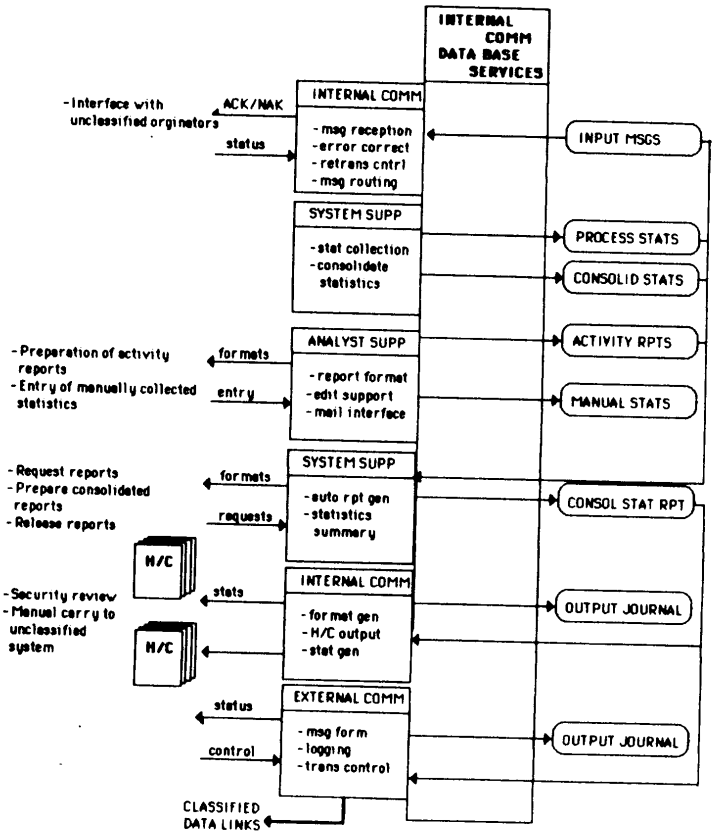

Declassified and Approved For Release 2012/05/31 : CIA-RDP88-00218R000300030001-0

Declassified and Approved For Release 2012/05/31 : CIA-RDP88-00218R000300030001-0

FBIS–PROCESS HIGHLIGHTS: ADMINISTRATIVE

- STATISTICS FROM FBIS-WIDE ACTIVITIES ARE COLLECTED AND FILED AUTOMATICALLY
- STATISTICS ARE ALSO COLLECTED AND FILED MANUALLY ON APPROPRIATE PROCESSES
- SYSTEM STATISTICS ARE GATHERED IN THE ANALYTICAL SERVICES SUBSYSTEM
- ANALYSIS AND EVALUATION OF THESE STATISTICS ARE PERFORMED BY BUREAU AND EACH SUBSYSTEM

Declassified and Approved For Release 2012/05/31 : CIA-RDP88-00218R000300030001-0

Declassified and Approved For Release 2012/05/31 : CIA-RDP88-00218R000300030001-0

- o OVERALL DESIGN
- o DAILY OPERATIONS SUBSYSTEM
- o TRANSLATION SERVICES SUBSYSTEM
- o ANALYTICAL SERVICES SUBSYSTEM
- o DESIGN SUMMARY
- o OPERATIONS CONCEPT
- ----> o SUMMARY

Declassified and Approved For Release 2012/05/31 : CIA-RDP88-00218R000300030001-0

Declassified and Approved For Release 2012/05/31 : CIA-RDP88-00218R000300030001-0

FBIS–HEADQUARTERS: SYSTEM FEATURES

- COMPLETE AND FULLY CAPABLE
  - EDITORIAL AND COMPOSITION SUPPORT
  - LARGE-SCALE TEXT DATA BASE STORAGE AND SEARCH
  - QUALITY FACILITIES FOR SPREADSHEET AND RELATED FUNCTIONS
- LOW RISK
  - OFF-THE-SHELF PRODUCT HARDWARE
  - ESTABLISHED SOFTWARE PACKAGES FOR BASIC CAPABILITIES
  - NECESSARY SOFTWARE DEVELOPMENT ALMOST ENTIRELY AT A HIGH LEVEL
  - NO HIGH-PERFORMANCE INTERFACES REQUIRED
- PERFORMANCE ACHIEVES OR EXCEEDS DESIRES IN ALL AREAS
- FUTURE DIRECTIONS ACCOMMODATED VERY WELL
  - EASY TO ADD WORKSTATIONS AND OTHER DEVICES
  - SYMMETRY OF DESIGN COULD EASILY SUPPORT AN UNCLASSIFIED ARCHIVAL DATA BASE
  - TEXT-SEARCH-IN-CONTEXT ADVANCES CAN BE EASILY ACCOMMODATED BY FREE TEXT SEARCH APPROACH

Declassified and Approved For Release 2012/05/31 : CIA-RDP88-00218R000300030001-0

Declassified and Approved For Release 2012/05/31 : CIA-RDP88-00218R000300030001-0

6. PROGRAM COST/SCHEDULE UPDATE

Declassified and Approved For Release 2012/05/31 : CIA-RDP88-00218R000300030001-0

Declassified and Approved For Release 2012/05/31 : CIA-RDP88-00218R000300030001-0

7. PLANS FOR NEXT PHASE

Declassified and Approved For Release 2012/05/31 : CIA-RDP88-00218R000300030001-0

Declassified and Approved For Release 2012/05/31 : CIA-RDP88-00218R000300030001-0

FBIS–PLANS FOR NEXT PHASE

ESL WILL:

- PURSUE USER OPERABILITY AND SUITABILITY
- KEEP TEAM AVAILABLE
- FORM A TAILORED TEAM FOR ACQUISITION PHASE
- CONTINUE DATA BASE INTERNAL R&D INVESTMENT

Declassified and Approved For Release 2012/05/31 : CIA-RDP88-00218R000300030001-0