25X1

Directorate of
Intelligence

~~Secret~~

file copy
do not remove

22 briefs
5 art

International Economic & Energy Weekly

25X1

10 August 1984

~~Secret~~

DI IEEW 84-032
10 August 1984

Copy 683

Page Denied

Sanitized Copy Approved for Release 2011/06/13 : CIA-RDP97-00771R000707120001-5

25X1

International Economic & Energy Weekly

25X1

10 August 1984

Comments and queries regarding this publication are welcome. They may be directed to Directorate of Intelligence, 25X1
25X1 25X1

25X1

International Economic & Energy Weekly

25X1

Synopsis

25X6

25X1

Page Denied

Next 1 Page(s) In Document Denied

Briefs

Energy

Red Sea Oil Flows

The recent rash of ship explosions in the Red Sea may be disrupting some oil traffic through the region. 25X1

25X1

Red Sea: Current Oil Flows [a] *Thousand b/d*

	Suez Canal	SuMed Pipeline
Northbound	**1,600**	**1,300**
Point of origin		
Red Sea	650	400
Egyptian oilfields	450	200
Saudi Arabia/Yanbu	200	200
Persian Gulf via Bab al Mandab	950	900
Destination		
Egypt	0	200
Southern Europe	1,050	800
Northern Europe	100	100
United States/Canada	100	100
Other	350	100
Southbound	**350**	
Destination		
Red Sea	80	
Saudi Arabia	45	
Egypt	15	
Ethiopia	10	
Sudan	10	
Through Bab al Mandab	270	
India	120	
Iran	45	
Japan/Asia	45	
Africa	40	
Other	20	

[a] Estimated; based on 1983 oil flows and trade patterns.

25X1

[redacted] 25X1

Currently almost 3 million b/d of crude oil and refined petroleum products transit the Gulf of Suez to enter the Suez Canal and SuMed Pipeline. Approximately one million b/d of this traffic originates within the area, at either Yanbu or from Egypt's offshore oilfields in the Gulf of Suez. The remainder—which comes almost entirely from the Persian Gulf—enters the Red Sea via the Bab al Mandab. Approximately 350,000 b/d of oil flows southward through the Suez Canal; one-fourth is bound for Red Sea ports and the remainder enters the Indian Ocean through the Bab al Mandab. [redacted] 25X1
25X1

Potential Offshore Oil Dispute Between India and Pakistan

[redacted]

India's offshore oil discovery in an area claimed by India and Pakistan is likely to add another irritant to growing tensions on the subcontinent. The US Embassy in New Delhi reports that two months ago an Indian official claimed that a chartered US rig struck oil 30 miles off the Pakistan coast in the Gulf of Kutch. Recent Pakistani press accounts suggest that the find is within Pakistan's territorial waters. Both India and Pakistan incur heavy foreign exchange costs importing oil and are actively searching for new domestic supplies. [redacted] 25X1
25X1

International Finance

Mexico Battles To Control the Budget

[redacted]

Unplanned outlays are making it difficult for Mexico City to meet this year's public-sector budget deficit target set in its IMF-supported austerity program.

[redacted] 25X1
25X1

While the IMF earlier agreed that Mexico City could increase the public-sector budget deficit from 5.5 to 6.5 percent of GDP if the Mexican economy did not show signs of recovery in the first half of 1984, Mexico City will have to make additional reductions in subsidies or generate new revenues to meet even the more lenient target. If the target is missed by only a small margin, we believe the IMF will continue its support because economic growth remains below the IMF goal and interest rates have risen sharply. [redacted] 25X1

Trinidad and Tobago To Seek IMF Help

Trinidad and Tobago will soon seek financial relief from the IMF [redacted] 25X1
[redacted] The economy has been hard hit by the slack oil market; 25X1
petroleum accounts for 90 percent of exports. The Trinidadian Government
already has instituted limited austerity measures such as cuts in consumer 25X1
subsidies and public jobs in an attempt to accustom the public to belt
tightening before adjustments under an IMF-supported adjustment program
are put into place. The government hopes that a gradual approach will
minimize political backlash and that the economy under IMF tutelage will
improve before the 1986 general elections. [redacted] 25X1

Until oil prices fell in 1982, Trinidad was among the Caribbean's most dynamic economic performers. As the wealthiest member of the Caribbean Economic Community (CARICOM), Trinidad served as one of the largest local markets for regionally produced goods and provided aid to other CARICOM countries. Trinidad's deteriorating economic situation has sharply curtailed its economic largess. [redacted] 25X1

New Foreign Aid For Nicaragua

A Mexican journalist with good access to leftist circles claims in an article that Moscow has agreed to supply Nicaragua with $45 million worth of oil during the second half of this year to compensate for declining Mexican deliveries. This represents a 50-percent jump over Soviet supplies in the first half of the year. The journalist's claim is substantiated by recent shipping patterns. 25X1
Deliveries on this scale would require the arrival of one tanker per month, which has occurred in July and August. [redacted] 25X1

[redacted] 25X1

[redacted] 25X1

Portuguese Current Account Deficit Shrinking

Preliminary data indicate that Portugal's current account deficit in 1984 could be less than half of last year's $1.7 billion. Most of the improvement should come from trimming the trade deficit. During the first five months of this year the trade deficit declined by $500 million because of a drop in import demand and strong export performance. For the year, it may shrink by close to $1 billion. Earnings from services and transfers, on the other hand, probably will remain weak despite a rebound in tourism earnings because of falling worker remittances and higher interest payments. Portuguese officials nonetheless expect to stay within the $1.25 billion target for the current account deficit that is part of Portugal's agreement with the IMF. 25X1 25X1

Global and Regional Developments

25X6

ASEAN Considers Pacific Basin Community

The foreign ministers of the Association of Southeast Asian Nations (ASEAN)—Indonesia, Malaysia, Thailand, Singapore, Brunei, and the Philippines—for the first time included a discussion of a Pacific Basin economic community at their annual meeting last month. Malaysia's Prime Minister Mahathir has become increasingly vocal in his support for the grouping—to be patterned after the European Economic Community—and will probably use Malaysia's position as chairman of ASEAN's standing committee to push this idea in the coming year. A unified ASEAN position is unlikely in the near term because the issues of which countries of the Pacific rim would be included and how the community would be administered are still being debated. Moreover, the other ASEAN countries are concerned that a new community would overshadow ASEAN's current role. 25X1 25X1

Thailand Debates F-16 Purchase

Thailand's budget committee approved in principle $54 million for the first payment on the F-16A/100 aircraft last week, but continuing debate over the financial and military implications of the $520 million purchase could delay a final decision for two or three years. 25X1

25X1

The sale, still subject to US Congressional approval, would be the first to an ASEAN nation and could prompt similar requests from other ASEAN members. 25X1

Australian Wheat Exports to Stay Up

Despite a drop in wheat production after last year's record level, we expect Australia to remain an aggressive competitor of the United States in the 1985 Market Year (MY 85)—July 1984 to June 1985—because of a 7.5-million-metric-ton wheat stock carryover. According to USDA estimates, Australian wheat exports will reach 14 million tons this market year—two million tons above last year and the highest level in five years. These exports represent nearly 14 percent of total expected world wheat exports. 25X1

25X1

Libyan-Italian Cooperation Improves

Libya and Italy reached a breakthrough on debt repayment and discussed several commercial ventures during the recent meeting of the Italian-Libyan Commission. Under a new agreement, Rome will accept crude oil from Tripoli in payment for up to $600 million in government-guaranteed commercial debts, and cash for as much as $200 million in other commercial debts. In addition, Libya offered $1.2 billion in public works contracts to Italian firms and signed a $235 million contract to develop offshore oil resources. Nuclear cooperation was discussed and a new military sales agreement was signed, according to the US Embassy in Rome. Qadhafi's moderate stance with the Italians reinforces his efforts to end Libya's isolation and to exploit differences between West European countries and the United States over their policies toward Libya. The weak market for Libyan petroleum and declining foreign exchange reserves also provide strong motivations for the regime to seek oil barter arrangements. 25X1

25X1

EC Encourages Patent Licensing

The EC Commission recently issued a regulation that permits firms to arrange market sharing and cooperation agreements with licensees of their patents. This effort to spur technology transfer within the Community exempts firms from prohibitions in the EC treaty against such trade-hindering arrangements. The Commission hopes the measure will stimulate EC patent holders to increase licensing of their manufacturing technology throughout the Community. While this provision may increase the flow of technology among EC firms, we believe the market sharing will tend to keep prices of the goods produced high and will do little to improve competitiveness in non-EC markets. 25X1

25X1

National Developments

Developed Countries

Israeli Banking Difficulties

The managing directors of Israel's four largest banks—Bank Leumi, Bank Hapoalim, Israel Discount Bank, and United Mizrachi Bank—were indicted on charges of collusion last week. The Industry and Trade Ministry charged that during the period of June-November 1983, the four bank heads acted together to simultaneously drop the annual interest rate on certificates of deposit from 120 to 85 percent. Israel's inflation rate in 1983 was 191 percent. Spokesmen for the banks have denied the charge and claim that they were following sound business practice because interest rates charged to loan customers were lower than those being paid on CDs and bank applications to the Finance Ministry for interest rate increases on loans were consistently denied. 25X1

25X1

The charges against the banks come when confidence in Israeli banks has already been damaged because of poor 1983 profits. Moreover, the banks are directly involved in Israel's foreign exchange transactions and any damage to their international credit rating could harm Israel's ability to borrow abroad at a time when its foreign exchange position has weakened. In July, foreign exchange reserves fell by $350 million to $2.6 billion, according to press reports. 25X1

South African Economic Woes

Major South African banks are expected to raise their prime lending rate to a record 25 percent in response to government austerity measures, according to Embassy sources. Pretoria has tightened credit for commercial banks, promised to restrain government spending, and placed restrictions on consumer borrowing. These measures are intended to reduce inflation and buttress the South African rand, which has fallen to record lows against the dollar. 25X1 25X1

South Africa will suffer its third consecutive year of declining real national income and rising black unemployment because of the strict controls on borrowing combined with the drought and low gold prices. Few funds will be

available to satisfy the expectations of nonwhites for more economic benefits under the new Constitution, which creates parliamentary chambers for Coloreds and Indians separate from those of whites. Moreover, the government may lose some support among whites hardest hit by credit restrictions, including farmers and middle-class consumers. Rightwing opposition parties who already are attacking the government for its racial reform policies will seek to exploit the dismal economic outlook. 25X1

Irish Austerity Pushed Through During Summer Recess

The Fine Gael–Labor coalition launched a new austerity program this week—earlier than expected—by instituting expenditure cuts while Parliament is in recess. The spending cuts come primarily from halving food subsidies and will raise milk, bread, and butter prices immediately. Labor's support was apparently won only with some difficulty, and we believe Prime Minister FitzGerald faces a fierce budget battle in September, when the government unveils the next installment of its austerity plan. By instituting part of the plan during the summer holiday, the Prime Minister may hope to get the public used to the idea that more cuts are on the way and thus reduce the controversy this autumn. 25X1 25X1

This is FitzGerald's second attempt at austerity. His Fine Gael–Labor coalition fell apart two years ago over an austerity budget and lost the subsequent election. When the coalition regained power in January, it was careful to avoid controversial budget cuts or tax increases. The government now claims, however, that high US interest rates and the strong dollar are forcing Dublin to take austerity measures to assist efforts to repay medium- and long-term foreign debt—close to $14 billion in 1983—and to reduce the nagging government budget deficit—$1.1 billion, or 7 percent of GNP in 1983. 25X1

Less Developed Countries

Indian Planners Revise Development Strategy

India will curb import growth and restrain government investment in new industrial projects, according to the recently approved guidelines for the Seventh Five-Year Plan (1985-90). According to press and US Embassy reports, the preliminary planning paper emphasizes more efficient use of existing industrial capacity; completion of ongoing energy, irrigation, and transportation projects; and agricultural growth—particularly rice production in eastern India. The paper also proposes greater freedom from government controls for small- and medium-size private firms. In our view, this economic strategy reflects concern over impending shortages of foreign exchange and of government revenue. Prime Minister Gandhi, however, has publicly characterized the plan priorities as food, work, and productivity to highlight jobs and government poverty reduction efforts in an election year. 25X1 25X1

Argentina's Wheat Export Prospects Decline

Unseasonable weather during the May-August planting season and a smaller planted area have lowered the projected 1984/85 (December to November) wheat crop to 10.0 million metric tons. This compares with 12.0- and 14.5-million-ton crops the two previous seasons. Argentine farmers—expecting better prices and yields from soybeans—are expected to plant only 6.3 million hectares to wheat, down 700,000 hectares. A smaller crop will provide roughly 5.5 million tons of new crop wheat for export during 1984/85—as much as a third lower than this year. While this export level will allow Buenos Aires to service its key markets—the Soviet Union and Iran—it will reduce Argentina's ability to sell to other markets. This setback for wheat could reduce Argentina's export earnings by as much as $300 million in late 1984 and early 1985—Argentina's primary wheat export period. Buenos Aires could recoup some of this loss when the new soybean crop is marketed in mid-1985.

25X1

25X1

Argentina Wheat Trends [a]

Million metric tons

	Production	Domestic Use	Exports
1980/81	7.78	3.95	3.84
1981/82	8.30	4.30	3.64
1982/83	14.50	4.45	9.85
1983/84	12.00	4.50	7.90
1984/85 [b]	10.00	4.50	5.50

[a] Data based on a December-to-November crop year.
[b] Forecast.

25X1

25X1

Zimbabwean Budget

Zimbabwe's recently annnounced budget for FY 1984/85 is intended to slow growing government deficits. Expenditures are set to rise by 7 percent—compared with the prevailing 19-percent inflation rate—while revenues are

25X1

projected to increase 8 percent. According to US Embassy sources, the budget represents a victory for moderates in the government because of reductions in government operating expenditures and greater emphasis on export incentives. The planned deficit of $560 million, however, still is equivalent to nearly 11 percent of projected national income—substantially above the IMF's guideline of 5.5 percent—and this may be a sticking point in future negotiations between Harare and the IMF. Moreover, controlling government spending will prove difficult. Defense expenditures, for example, are to fall by 16 percent under the new budget, but we expect that Prime Minister Mugabe will come under pressure from the military to restore defense funds in the supplemental budget next February. 25X1

Communist

Record Chinese Summer Harvest Clouds Imports

According to Chinese press reports, China has harvested a record summer grain crop, mostly wheat, of 88.5 million metric tons, up 5 percent from 1983's revised output of 84 millions tons. Total grain production this year could top the 1983 record harvest of 387 million tons if favorable weather continues. The record summer grain crop will lessen Beijing's incentive to take delivery of the 14 million tons of grain it agreed to import from various sources in 1984, including 8 million tons under the US-China long-term grain agreement (LTA). 25X1 25X1

Problems With Northern Vietnamese Rice Crop

Hanoi is taking measures to forestall widespread food shortages later this year because of a shortfall in rice production in the north. Alternating floods and drought, combined with the worst insect infestation since 1980 reduced the spring rice crop in the north by 91,000 metric tons compared with 1983—a 10-percent drop—according to the Vietnamese press. The late spring harvest then delayed the transplanting of seedlings for the main crop until the onset of the summer monsoon, and this will further reduce output. Although early indicators point to a good rice crop in the south, which produces 60 percent of the country's rice, Hanoi is concerned that its inefficient food distribution system will not be able to transport sufficient rice to the heavily populated north. As a result, the government has accelerated efforts to transport rice from the south, made informal requests to Sweden and the Soviet Union for aid, and last month—despite a critical shortage of foreign exchange—bought 70,000 tons of low-quality rice from Thailand. 25X1 25X1

Commercial Jet Engines: Competition for the 150-Seat Aircraft Market

25X1

Announcement of a go-ahead to build the V-2500 jet engine made by a five-nation consortium led by Pratt & Whitney and Rolls-Royce, signals heightened competition for engines sized for 150-to-200-seat commercial aircraft. This new engine will compete with the SNECMA/GE CFM56, which has enjoyed a five-year monopoly in this engine class. The overall market for this size engine is estimated to be some 7,000 units to the end of the century, with a potential value of $18-20 billion. We estimate that the United States will garner 40 to 45 percent of sales, down, however, from as much as 75 percent in previous competitions for other-size engines because of the increased internationalization of production. In addition, we expect US firms will get almost all of the lucrative follow-on spare parts and maintenance business.

An International Program

International Aero Engine Corp. (IAE) was formed early this year to develop and produce the V-2500. This advanced-technology, 20,000-to-25,000-pound-thrust engine is designed for 150-seat aircraft such as the all new Airbus Industrie A320 and derivative designs of US aircraft—the Boeing 737 and the DC-9. Each of the major shareholders, Great Britain's Rolls-Royce and United Technologies' Pratt & Whitney, has 30 percent; Japan's Ishikawajima-Harima Heavy Industry, Kawasaki Heavy Industry, and Mitsubishi Heavy Industry, have 20 percent; and Motoren und Turbinen Union of West Germany and Fiat of Italy have the remaining 20 percent. According to IAE officials, the engine offers a 14-percent fuel saving over the CFM56 engine. Certification has been promised for April 1988, with deliveries later that year.

The technology base for the V-2500 relies heavily on the modern large engines of Rolls-Royce and Pratt & Whitney, the RB211 and PW2037. Each of the consortium members will be responsible for the design, development, and manufacture of a major engine component, with the final assembly at Rolls-Royce and Pratt & Whitney plants. Rolls has responsibility for the high-pressure compressor, while Pratt & Whitney is designing and developing the engine hot section (combustor and high-pressure turbine). Japan Aero Engine Company will design and produce the fan and low-pressure compressor. Motoren und Turbinen Union of West Germany has responsibility for the low-pressure turbine, and Fiat of Italy is responsible for the gearbox.

25X1
25X1

Foreign participation in the V-2500 program is facilitated by substantial government support. London, for example, is expected to finance about half of the $360 million contribution by Rolls-Royce and already has appropriated $87 million to launch its program. Similarly, we believe the Japanese Government is providing JAEC more than half of the estimated $240 million Japanese share.

25X1

Market and Timing

The V-2500 engine competes with the CFM56 engine from CFM International. This company, formed in 1974 by General Electric and the French company SNECMA, developed the CFM56 family of fuel-efficient engines. The engines were based on GE's military F101 engine core and its commercial CF6 fan and turbine technology. The 700 engines

25X1

New Fuel-Efficient Engines Produced by International Consortiums

CFM International CFM56

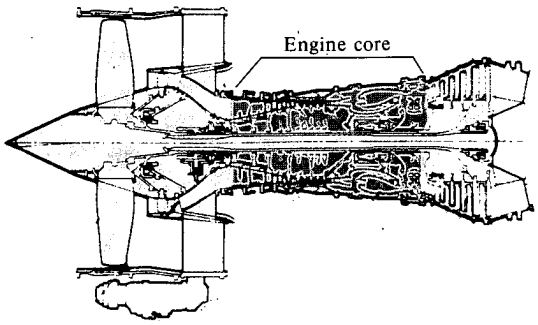

SNECMA
General Electric

International Aero Engines V-2500

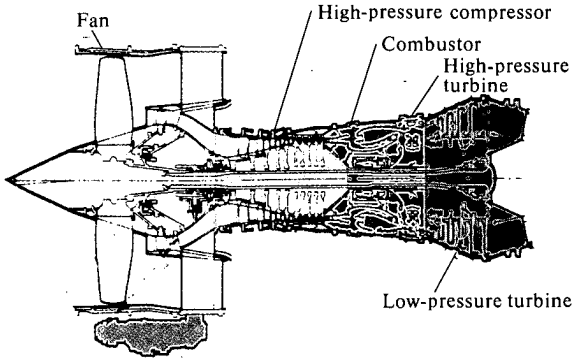

Rolls-Royce
Pratt & Whitney
JAEC (Japanese Aero Engine Company)
MTU (Motuoren and Turbinen Union)
Fiat

	Consortium members	Percent equity	Responsibility	Technology base
CFM International **CFM56**	SNECMA	50	Fan, low-pressure turbine, engine assembly	CF6
	General Electric	50	High-pressure compressor, combustor, high-pressure turbine, engine assembly	F101
International Aero Engines **V-2500**	Rolls-Royce	30	High-pressure compressor, engine assembly	RB211
	Pratt & Whitney	30	Combustor, high-pressure turbine, engine assembly	PW2037
	JAEC (Japan)	19.9	Fan	RJ500
	MTU (West Germany)	12.1	Low-pressure turbine	PW2037
	Fiat (Italy)	8	Accessory gearbox	PW2037

25X1

303347 8-84

The Aircraft

The new engine designs are being built for the aircraft competing in the 150-passenger market, including the all-new Airbus Industrie A320 and derivatives of Boeing's 737 and the Douglas DC9 (MD80). The A320 incorporates new technologies in wing aerodynamics, composite fiber and kevlar structures, and a two-man cockpit arrangement with advanced electronic controls and advanced avionics. Scheduled for delivery in early 1988, it is being offered with either CFM56 or V-2500 engines. Five airlines have placed orders and options for 96 of the CFM56-powered A320s to date, with deliveries starting in 1988. Marketing by IAE and AI has started for V-2500 versions that will be available six to 12 months after initial aircraft deliveries. Airbus is also considering the V-2500 for longer range four-engine aircraft, the TA11, but has not announced firm plans.

Among US-derivative designs, Boeing is offering the 737-300 for delivery in late 1984. This stretched model with the CFM56 engine offers approximately half the fuel saving projected by Airbus for the A320. Other possible designs include further stretched versions of the 737 and an all new 7-7 with deliveries in 1989 if launched this fall. McDonnell Douglas's entry is the MD80, currently powered by the PW JT8D-200, a less fuel-efficient engine. Further derivatives and an all-new aircraft using the newer engines are being studied, but no plans have crystallized.

sold to date have gone primarily for reengining older jet aircraft. The latest derivative, the CFM56-4, is offered for new 150-seat aircraft designs and is scheduled for availability in 1988. It will provide a fuel saving of up to 40 percent compared with engines used on early 737 and DC-9 aircraft. Another variant, designated the CFM56-5, with a further 7-percent increase in efficiency is to be announced soon

The market for these engines is estimated at $18-20 billion of the projected $65-70 billion market for 150-seat-aircraft sales through the year 2000. Eventual demand for these new engines will be reduced, however, when an all-new turboprop airplane with a 25-percent-fuel-usage advantage is introduced. This new design could be introduced as early as the mid-1990s. The feasibility of the turboprop concept, including R&D requirements for engine, propellors, and gearbox, is being assessed by NASA, and results are expected late in the decade. 25X1

Another factor that could affect sales of the V-2500 is the timing of the V-2500 engine availability. Airbus officials, for example, have expressed concern about the delay that could be caused by customers waiting for the V-2500 engine. In addition, industry observers note that a seven-company consortium is without precedent in aircraft engine development. The GE/SNECMA consortium with two members has been successful, but previous joint efforts between Rolls-Royce and Pratt & Whitney failed; both went on to develop their own engines (the RB211 and PW2037). Moreover, any shift in US export policies on engine sales to other countries could strain the program. 25X1 25X1

Implications for the United States

The two jet-engine programs aimed at the 150-seat market furthers the trend toward internationalizing key aerospace projects, and narrows the gap between foreign and US technological capabilities. On the sales side, we estimate that US participation in both engine programs will garner some 45 percent or $9 billion of sales through the year 2000, regardless of the outcome of the engine competition. The United States is expected to secure the major portion of follow-on spare parts sales and maintenance contracts. 25X1 25X1

25X1
25X1

While the US share of engine sales is smaller than in past programs, we believe part of the difference is offset by the development funds put up by the foreign consortium participants. On the negative side, however, we believe this pattern of joint development spurs technology transfer and diffusion to West European and Japanese companies and tends to narrow the gap in existing design capability, particularly in the engine combustor and turbine hot section and in compressor aerodynamics. Such diffusion also provides the USSR with additional targets from which to acquire these technologies. 25X1

25X1

The Contribution of Western Technology to Soviet Economic Performance

25X1

The USSR's planning and management system impedes assimilation and diffusion of imported Western technology.[1] The Soviets have mounted a large and effective effort to identify and acquire potentially helpful Western plant and equipment through both legal and covert channels. Moscow provides special resources to enable the prompt and efficient use of some of these imports, especially those for high-priority industries such as defense and energy. Most imports of Western plant and equipment, however, do not receive such special attention and fall victim to a host of constraints that diminish their usefulness.

Problems in Assimilation

Despite official encouragement, enterprise managers often resist introduction of new equipment and processes—imported or domestic. Product and process innovation cause downtime to increase and produce other short-term disruptions that jeopardize output goals—the prime success indicator of Soviet enterprises. Western studies have shown that it takes Soviet industry more than twice as long to implement innovations as in the West.

The inability of Soviet industry to assimilate new technology more easily and more quickly results in large part from:

- Poorly formulated shipping schedules, inadequate port facilities, and shortages of domestic transport that frequently delay the delivery of imported equipment to end-users.
- Chronic delays in construction that result in equipment lying idle for long periods of time.
- Reliable suppliers of the materials and equipment necessary to install and service the new technology that are either unavailable or difficult to find.
- Coordination among central planners responsibile for different phases of the same project that is often lacking.[2]

25X1

Perhaps the most common obstacle to the efficient assimilation of imports, however, is continuing Soviet reliance on technical documentation in using foreign equipment. Studies have shown that technology is transferred more efficiently through personal interaction. For example, Moscow imported the IBM Information Management System in 1974, but, it has never worked well mainly because the Soviets, rather than using IBM consultants, have used only the written instructions that accompany the equipment.

25X1 25X1 25X1 25X1

The malfunctioning of imported equipment is a major problem as well. Many malfunctions stem from the processing of unusually low-quality materials or from inadequate preventive maintenance. For example, Western equipment has broken down when used to make parts from steel that has too great a tensile strength or when used to make parts that exceed the specifications of the machinery.

25X1 25X1

[1] Assimilation is the mastering of imported technology by a single end-user. Diffusion is the use of the imported technology throughout the economy.

[2] An example of a situation where poor planning hinders the assimilation of new technology in the USSR is the construction of a color picture tube factory in Voronezh and a plant in the Western Ukraine to supply the picture tube factory with "sealing glass." The two plants—both using Western technology—are 1,400 kilometers apart, greatly increasing delivery problems and raising transportation costs.

25X1

25X1

When equipment malfunctions, the Soviets do a poor job of repairing it. Bureaucratic meddling often delays repair work.

Moscow tends to be tightfisted in spending foreign exchange on replacement parts. A breakdown of the simplest part can cause a bottleneck because the Soviets are slow in ordering replacements from the West. This problem occurs more frequently as equipment ages. Half of the 50 Western-made bulldozers used by the Lenzoloto Production Association gold-mining facility were idle recently because of a lack of spare parts. A parts shortage also has kept many imported US pipelaying machines—critical to the USSR's oil and gas industries—out of service for extended periods. This problem is likely to worsen. The spare parts portions of recent import contracts for the petroleum drilling industry have in many cases been cut by the Soviets by over 50 percent.

Problems in Diffusion

The arduous task of successfully diffusing Western technology throughout the Soviet economy is becoming increasingly difficult because of the growing complexity of imports. Successful diffusion usually requires the design of the import to be copied and incorporated in a Soviet-built machine. In many cases the Soviets lack the skills needed for series production.

Soviet researchers do not always have access to the types of equipment and resources used in the West to produce state-of-the-art machinery and thus have difficulty achieving the necessary quality standards. A case in point is the effort in the late 1970s of the research staff at the Mechanical Project Institute for Oil and Water Equipment in Moscow to develop a submersible pump for use in oil wells. The staff took apart a number of US pumps and attempted to copy them with minor modifications. The major stumblingblock was the refusal of Soviet industrial officials to supply the materials needed to duplicate the quality and durability of imported pumps. Staff engineers were amazed that US companies could easily obtain nickel and other metals for their pumps, since Soviet strategic metals are reserved primarily for direct defense applications. 25X1 25X1

A workable R&D organization is an absolute prerequisite for the successful adaptation and diffusion of imported technology throughout Soviet industry. The geographic and bureaucratic separation of most R&D organizations from end-user plants deprives the R&D employees of full knowledge of the environment within which their concepts must work. The perversity of the Soviet incentive system is also a problem. Worker bonuses are paid before ideas are translated into production. As a consequence, there is a significant gap between research and its actual application. 25X1

The formulation of workable concepts by R&D institutes is also impaired by the low quality (and sometimes virtual absence) of support services and equipment. 25X1 25X1 the Soviet Union has only 20,000 to 30,000 photocopiers. 25X1

R&D labor resources are misallocated. For example, most well-qualified scientists, for reasons of prestige, pursue theoretical work in research institutes—and are not the prime movers in applied R&D and technology diffusion. In addition, the successful performance of pilot plants developed to manufacture prototypes requires highly skilled blue-collar workers. 25X1 25X1 the innovating sector has difficulty attracting the talented workers it needs. 25X1

Even after workable R&D concepts are formulated and pilot tested, there is still no assurance they will be introduced into serial production. The R&D

establishment, for the most part, lacks the authority to force implementation of its recommendations over the objections of plant managers. The State Committee for Science and Technology (GKNT) supervises interbranch R&D, but its authority ends with the preparation of a prototype. The State Planning Committee (Gosplan) handles the serial production and distribution phases. With this split, each organization under the nominal supervision of the GKNT or Gosplan has tended to become parochial, creating barriers that inhibit the movement of an idea from conception to production.

Implications

During the first half of the 1970s, Soviet imports of Western plant and equipment measured in constant prices almost tripled. Even though the total value remained small—roughly 5 percent of Soviet investment in machinery and equipment—Moscow hoped these imports would have a substantial impact on economic performance and productivity. Moscow reasoned that the demonstration effect of Western technology would spur advances in Soviet equipment that would spread throughout the economy. The planned boosts in industrial productivity have not materialized, primarily because of assimilation and diffusion problems.

Moscow appears to have become more selective in its acquisitions of foreign technology. The volume of imports from the West last year was below what it was in the mid-1970s. In seeking Western technology, the Soviets now seem to be concentrating mostly on increasing their defense industries' capabilities and breaking bottlenecks in the energy and agro-industrial sectors.

Purchases of equipment from Eastern Europe are on the rise. This equipment, while less sophisticated than that available from the West, is still better than what is currently available in the USSR. Moreover, East European equipment generally is closer in overall design and specifications to Soviet equipment than is Western equipment. The Soviets apparently now perceive East European technology as a potentially greater contributor to general economic growth than the more advanced but harder to use Western equipment:

- Instead of having to rely almost exclusively on written instructions, the Soviets can easily enlist East European assistance in the transfer of equipment. East European engineers can help train Soviet workers and return to the plant to solve operational problems. Thus, the chance of successful assimilation is greatly increased.

- Instead of depending only on domestic research and development efforts to embody the import in Soviet equipment, Moscow can draw more easily on the work of the East European scientists who developed the technology, thus increasing the chance of successful diffusion.

25X1

25X1

The benefits of acquired Western technology to general economic performance will continue to be far below potential as long as the inefficiency of the Soviet administrative and incentive systems persists. As such, while imports can provide important contributions to some high-priority industrial sectors, they are not likely to play a critical role in any Soviet strategy to increase overall economic growth.

25X1

25X1

25X1

25X1

The Soviet Aluminum Industry: Slowing Growth and Increasing Dependence on Foreign Raw Materials

25X1

The USSR is the world's second-largest producer of aluminum, accounting for 19 percent of world output compared with the United States's 23 percent. The Soviets' rapid expansion in aluminum production in the 1960s and early 1970s was spurred by demand in the defense, electrical, and construction industries. Since 1975, growth has slowed sharply. All plants built or under construction since the early 1970s have used Western technology extensively, but there have been serious assimilation problems. Soviet growth in aluminum capacity has not been matched by expansion in the supporting domestic raw material base. As a result, the Soviets have had to depend increasingly on imports of bauxite and alumina which will continue to increase throughout the 1980s as domestic reserves of high-grade bauxite are rapidly depleted.

25X1

Leading Producers of Primary Aluminum [a]

Thousand metric tons

	1960	1970	1982
United States	1,827	3,607	3,274
USSR	565	1,640	2,735
Canada	691	972	1,075
Japan	133	733	351
West Germany	169	309	723

[a] Primary aluminum is the product of smelting alumina in an electric furnace. US primary aluminum production declined by 30 percent from 1980 to 1982, mostly because of weak markets in the transportation and construction industries caused by declines in the sales of new domestic automobiles and new houses. Japanese aluminum production decreased by almost 70 percent during the same period because high energy costs forced Japan to rely increasingly on less expensive aluminum imports.

25X1

Expansion of Capacity, 1959-83

Domestic demand—primarily in the defense, electrical, and construction industries—and growing export commitments have driven the expansion of the Soviet aluminum industry. Although the share of aluminum production directly consumed by defense has declined from roughly 35 percent in 1960 to about 15 percent in 1982, the defense industry remains the largest and most important consumer of aluminum and has top priority for quality and delivery.

Annual output of aluminum grew from an estimated 515,000 metric tons in 1959 to 2.8 million tons in 1983. Nearly 85 percent of this growth occurred before 1976, however, as production rose at an average annual rate of 10 percent a year. In 1976-80, growth slowed markedly to 3 percent a year, and during 1981-83 slowed to 1 percent a year.

25X1

The dramatic slowdown in the growth of aluminum production that began in 1976 has resulted from:

- A cutback in investment mainly in response to slower growth in domestic demand.
- A failure to meet production targets because of delays in constructing aluminum plants.
- Labor shortages and inadequate equipment maintenance.
- Slow assimilation of new production technology and periodic electric power shortages.

25X1

25X1

25X1

United States and USSR: End Uses of Aluminum, 1980

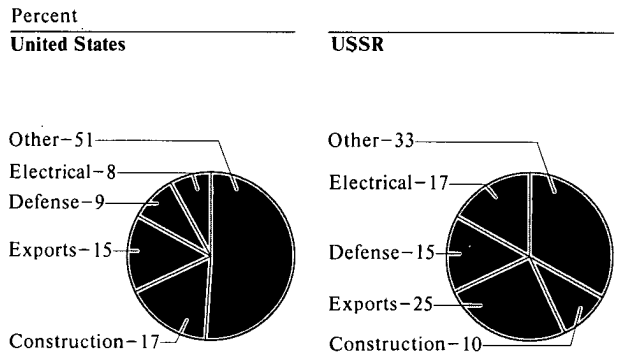

303068 6-84

USSR: Additions of New Capacity for Aluminum Production, 1959-85

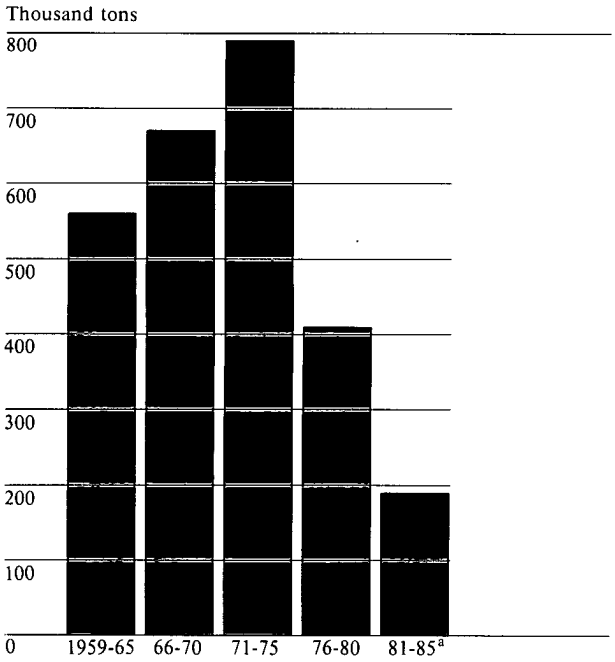

[a] Projected.

303065 6-84

The Contribution of Western Technology

Much of the investment allocated to the aluminum industry since 1970 reflects expenditures for Western equipment and technology. All new plants built or under construction since the early 1970s—the Nikolayev alumina plant, the Tursunzade and Sayansk aluminum plants, and the prebaked anode plant at Tursunzade—use Western technology extensively. In particular, the Soviets have been trying to upgrade the technology used in automation, electric power use, pollution control, and other production-related equipment. One of the Soviets' key objectives in seeking Western help in building the Sayansk plant was to gain advanced automation technology. 25X1

The Soviets often import technology for new aluminum plants and then reproduce the technology in other facilities. Potline operations, for example, were partially automated in the two decades between 1958 and 1978 by installation of computerized equipment (the *alyuminii* system), copied from French equipment. Assimilation of this system was very slow; for example, installation of the first system began at the Volgograd plant in 1958 but was not fully implemented until 1973. 25X1 25X1

Increasing Dependence on Foreign Raw Materials

Since the mid-1960s, domestic output of raw materials and aluminum has failed to keep pace with the growth in aluminum production capacity. The Soviets have been unable to meet increasing requirements for domestic raw materials because reserves of high-quality bauxite are being rapidly depleted and because of the unexpected cost and technical difficulty of exploiting nonbauxite ores. 25X1

25X1

In 1960, domestic raw materials were used for about 85 percent of aluminum production; in 1970, this share had fallen to about 70 percent; and, in 1980, to about 65 percent. Furthermore, the share of aluminum produced from domestic raw materials will continue to decline as aluminum production increases.

Trade

The USSR is the world's second leading exporter of unwrought aluminum. It exported roughly 600,000 tons in 1982—nearly one-fourth of production. Of this, about 70 percent went to Eastern Europe. Exports to non-Communist markets in 1982 amounted to only 165,000 tons, with almost 50 percent going to Japan. Sales of aluminum have been a small but stable source of hard currency earnings for Moscow. In 1983, exports of aluminum probably earned $250-300 million, supplying about 1 percent of total hard currency earnings.

Outlook

Overhead photography of construction projects under way indicates that additions to new aluminum capacity during 1984-90 will be limited. As a result, we project that Soviet aluminum production will grow at an annual rate of about 2 percent during 1984-90, reaching 3.2 million tons by 1990.

Despite slow growth, we do not expect domestic shortages of aluminum. Any large increase in domestic consumption could be met by reducing exports. Because of long-term trade agreements with Eastern Europe, such a decrease would probably reduce aluminum exports to the West and might even force reductions in sales to Eastern Europe.

Shortages of labor will continue to be a major problem in the aluminum industry. Although planners have emphasized that increased automation would reduce manpower needs, the USSR has been unable either to produce the necessary equipment or to rapidly assimilate and diffuse foreign technology. Moreover, shortages of skilled technical personnel will impede the introduction of automated equipment.

25X1

25X1

We believe depletion of high-grade bauxite reserves will continue, causing mining to become increasingly expensive and forcing the Soviets to import increasing amounts of bauxite and alumina.

25X1

25X1

25X1

25X1

25X1

International Financial Situation: Political Update [redacted]

25X1

Over the past month, budget stringencies have heightened military disaffection in Argentina, Peru, Bolivia, and Nigeria, although in Peru measures are being taken to minimize the impact of the cuts. In the Philippines, the opening of the National Assembly on 23 July spurred large-scale demonstrations, and the newly elected political opposition moved immediately to challenge President Marcos's handling of the economy. Concern that meeting targets under an IMF program would spark widespread social unrest has prompted the Dominican Republic to pursue a program of gradual economic adjustment measures, but without reaching a formal IMF accord. [redacted]

In **Argentina**, President Alfonsin has displayed a "take charge" attitude in quelling overt dissension within the Army and in dealing with labor and the public on economic austerity measures. Alfonsin reshuffled the top Army command by replacing the Army Chief of Staff and other senior officers last month. [redacted] On the labor front, the President has protected low-wage earners but held other wage increases below inflation. He offered fresh concessions to union bosses from the opposition Peronist party but warned them to curb strike activity and ease their wage demands. In his speeches, Alfonsin prepared the public for a period of "mild" austerity as negotiations with the IMF continue. He also moved to improve Argentina's international image by indicating a willingness to reach agreement with Chile on the Beagle Channel dispute and holding talks with the United Kingdom on the Falklands. [redacted]

To improve strained relations with the military, President Belaunde of **Peru** concluded prolonged negotiations with the French for the purchase of French Mirage 2000 jets. This $650 million arms purchase will conflict with Peru's budget targets under its IMF-supported economic adjustment program, which limits military spending to $200 million, down from $360 million in 1983. [redacted] 25X1

[redacted] also reports that the Soviets continue to offer tanks and helicopters on generous terms. According to press reports, the Soviet Union offered a $50 million long-term, low-interest package with partial payment in commodities instead of hard currency. The military is seeking increased capabilities in part to counter a new wave of terrorist attacks by the Sendero Luminoso. [redacted] 25X1

The US Embassy in Peru reports that teachers may not remain satisfied with their June wage settlement because public workers subsequently received 20,000 more soles a month (about $7) in their settlement. Increases in the teacher and government-worker wage settlements will cost the government the equivalent of 2 percent of GNP or $340 million, according to the Embassy. The government blamed the three-week strike by public workers in June for its inability in early July to make interest payments on external debt. [redacted] 25X1

We believe a failed military coup and kidnaping of **Bolivian** President Siles on 30 June temporarily has solidified civilian support for his government and may encourage leftist radicals in the government to take steps to defend against a coup. Nevertheless, Siles faces enormous economic problems and widespread opposition to austerity measures. Last week civil servants began an indefinite strike demanding higher wages. [redacted] 25X1

The Buhari government in **Nigeria** is fearful that any new policy initiative could trigger a coup attempt. The eight-month-old government has 25X1

failed to meet its promise to revive Nigeria's economy swiftly, thus fanning public and military dissatisfaction. Food prices have risen above levels before the coup, and shortages of sugar, rice, and vegetable oil are increasing.

In the **Philippines**, continued delays in reaching agreement with the IMF are adding to the economic deterioration and making it more difficult for President Marcos to manage domestic politics. A full military alert for the opening of the National Assembly led to a confrontation between soldiers and thousands of antigovernment demonstrators who were lobbying for political reforms. The government also faced numerous student demonstrations across the country last month protesting tuition increases and reduced government subsidies for education. Workers, too, have stepped up their protests. To cope with increased opposition activity, the government has beefed up its training for riot police, used tear gas in student protests near Malacanang Palace, and temporarily reinstituted "street marshals" to fight street crime.

Both moderate and radical opposition groups are using economic issues—including the domestic banking crisis—to challenge and discredit the Marcos government. At the opening of the National Assembly, the newly elected political opposition questioned reappointment of Prime Minister Cesar Virata, charging that he has mishandled the economy. The Communist Party of the Philippines (CPP) also is exploiting the economic crisis. According to US Embassy reports, the CPP has begun a campaign of economic sabotage that has targeted large projects linked with Marcos's associates as well as government showcase projects. The Embassy has recorded 16 incidents since April.

The **Dominican Republic** has been pursuing an informal program with the IMF since the government broke off talks for a standby last month. President Jorge Blanco feared that IMF proposals for electricity rate increases—on top of planned boosts in fuel prices—would precipitate widespread social unrest. Santo Domingo hopes its program will serve as a steppingstone to a formal IMF standby agreement sometime in early 1985. Despite the President's efforts to build a consensus behind belt-tightening measures, labor unions and leftist groups are continuing preparations to protest austerity.

25X1

25X1

25X1

25X1

Afghanistan: Tenuous Food Situation [redacted] 25X1

Food supplies over the past year probably have been comparable to levels before the Soviet invasion and adequate to meet current needs. Soviet operations have caused some disruptions, but have not significantly reduced overall food supply levels. Localized shortages of food and high prices have resulted from disruptions in the distribution system and poor harvests in a few areas. The high level of military operations last spring and this summer or an effort by the Soviets to deny food to the insurgents and their rural supporters could lead to serious shortages as early as this winter, and unfavorable weather could lead to widespread shortages by early next year. [redacted]

Agricultural Problems and Resiliency

Since the Soviet invasion, the agricultural sector has faced numerous disruptions. [redacted] large numbers of landowners have fled the country, taking valuable machinery as well as financial assets. The flight of more than 3 million people to neighboring Pakistan and Iran and migration to the cities have reduced the extent of cultivation as well as demand. Routine maintenance of vineyards, orchards, and irrigation networks is being neglected. [redacted]

[redacted] military operations have resulted in burned crops, damaged grainfields, and destroyed irrigation systems. In some cases the Soviets have deliberately destroyed crops in retaliation for insurgent operations. [redacted] land along major transportation routes and around military bases has fallen out of production either because the Soviets want a security zone or the farmers fear for their lives. [redacted]

The Soviets, however, generally allow the agricultural sector to operate as it did before the invasion. Government-produced fertilizer, for example, is sold freely throughout Afghanistan [redacted] 25X1 cutting production of food in rural insurgent-held areas would only force the USSR to increase its supplies of food to urban areas. [redacted] 25X1

The primitive nature of Afghanistan's agricultural sector has softened the impact of the Soviet occupation. Most farmers operate at the subsistence level and are not heavily dependent on outside sources of modern equipment, fuel, chemical fertilizers, improved seeds, or pesticides. In addition, [redacted] 25X1 the destruction associated with military operations is only a very small share of total land under cultivation. [redacted] 25X1 25X1

25X1

Manpower apparently has been sufficient to sow and harvest crops, albeit on fewer acres. We believe some of those who have left the country or migrated to the cities return to work in the fields during periods of peak labor demand. [redacted] 25X1

25X1

Domestic Food Production

25X1

[redacted] 25X1 there were good food harvests in most regions during 1983. The major exception was in the Khowst Valley, where heavy fighting resulted in abandoned fields. While we cannot measure production of all food crops, we believe the wheat 25X1

25X1

Major Grain-Producing Regions in Afghanistan

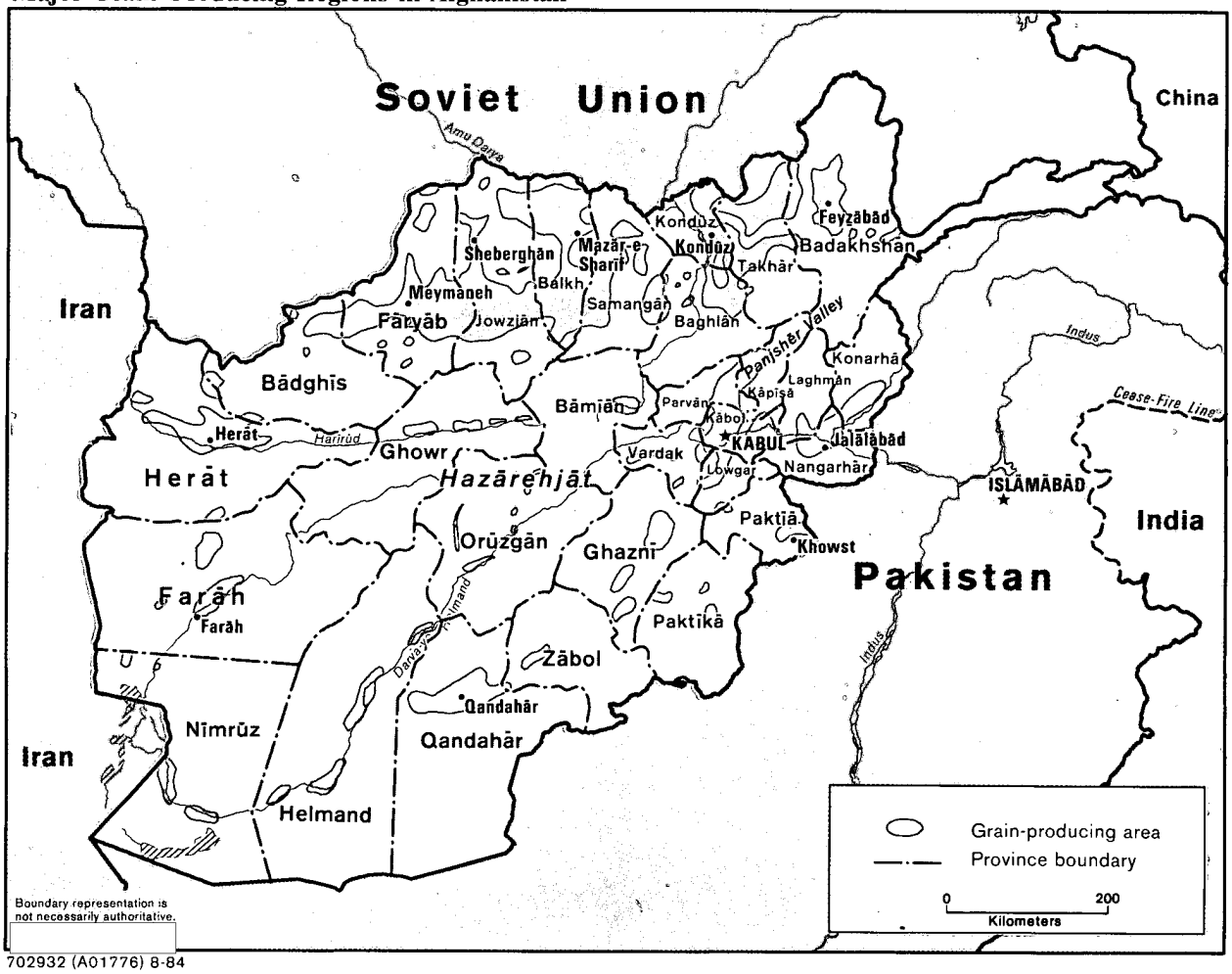

702932 (A01776) 8-84

25X1

harvest is a useful indicator of total food production. We estimate the 1983 wheat crop at between 2.5 and 3.0 million metric tons.

Production of industrial crops, even by government records, has dropped dramatically. Harvests of cotton, the most important commercial crop, and sugar beets have declined by two-thirds since the mid-1970s. We believe some of the resources in producing these crops—land and labor—may now be used in producing basic foodstuffs.

25X1

Imports Fill Gap

We estimate that slightly more than 300,000 tons of wheat were brought into Afghanistan from the USSR and Pakistan in 1983. According to Soviet and Afghan press reporting, wheat imports from the Soviet Union in 1983 were 160,000 to 180,000 tons. Most of the Soviet grain was sent to Kabul, where the population has

25X1
25X1
25X1

Agriculture Before the Invasion

Agriculture is the most important sector of the economy. In the mid-to-late 1970s, agriculture provided about 60 percent of national income and employed 80 percent of the population. Agricultural output grew by 3 percent annually in the mid-1970s, and the country was roughly self-sufficient in foodgrain production in 1977.

Afghanistan's cultivated land is scattered throughout the country, mostly in valleys along rivers and other sources of water because rainfall is uncertain and inconsistent. Only 8 million of Afghanistan's 63 million hectares are arable, and throughout the mid-to-late 1970s Afghan farmers cultivated on average only about half of the arable land. Total irrigable area is about 5.3 million hectares, of which about 2.6 million were irrigated annually, with the balance remaining fallow. About 1.4 million hectares of irrigated land has adequate water throughout the year to make double cropping possible.

The production of foodgrains utilizes 90 percent of land under cultivation. The remaining 10 percent has been devoted primarily to fruits, vegetables, cotton, oil seeds, and fodder crops:

- *Wheat, the primary grain crop and main food staple, is grown on about 60 percent of the total cultivated area—2.4 million hectares. It is grown throughout the country and on half of the irrigated land. In 1976, wheat production reached a record 2.9 million metric tons, and no imports were required.*
- *Corn is the second most important cereal and is used for human consumption and animal fodder. It is planted on about 500,000 hectares, and average production has been about 800,000 tons. Corn is grown primarily in the eastern valleys bordering Pakistan and in the Helmand Valley.* 25X1
- *Rice is grown principally in the north around Baghlan and Konduz; other rice-growing areas are Herat, Nangarhar, and Helmand. Rice is planted on about 200,000 hectares, and peak production reached about 450,000 tons in 1976.*
- *Barley is grown on about 300,000 hectares, primarily in rain-fed, highland areas with short growing seasons. It is used for human consumption and animal feed. Peak output was about 400,000 tons in 1976.* 25X1
- *Truck gardens, cultivated orchards, and vineyards, while utilizing less than 10 percent of the arable land, yield an important harvest of vegetables, fruits, and nuts. Peak production was about 1.6 million tons in 1976.* 25X1

25X1

increased to nearly 2 million from 750,000 before the invasion. the movement of people from rural to urban areas, disruption of transportation, and the government's inability to collect grain and other agricultural products in insurgent-controlled areas left urban areas with serious shortfalls.

Most of rural Afghanistan, which is controlled by the insurgents or is only subject to limited government control, appears to be almost self-sufficient in food production. most of the insurgents get their food from the local population and do not carry large supplies while on operations. 25X1

We believe that in areas where domestic supplies are insufficient, shortages are alleviated by imports primarily from Pakistan. Western observers estimate that roughly 140,000 tons of wheat are brought in annually from Pakistan through unofficial channels. The US Embassy in Kabul assumes that a large share of these supplies are diverted from the refugee camps. The Afghans also purchase surplus grain from the Pakistanis. 25X1

25X1

25X1

Afghanistan: Foodgrain Production[a]

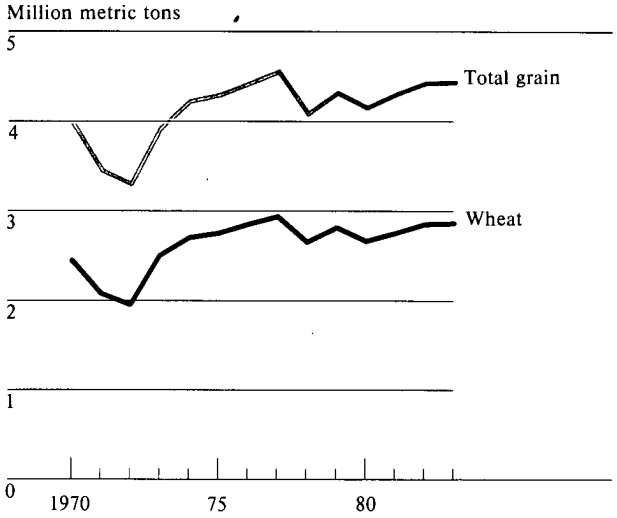

[a] Production figures are for fiscal years ending 20 March of the stated year.

303338 (C00130) 8-84

Afghanistan: Kabul Prices Index[a]

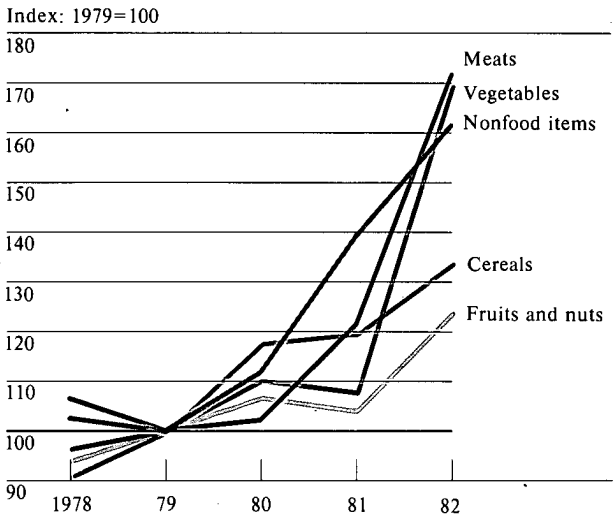

[a] Index figures are for fiscal years ending 20 March of the stated year.

25X1

303339 (C00131) 8-84

Military operations and patrols, however, have interfered with internal and external trading necessary to balance food deficit and surplus areas and have caused higher prices. Goods used in barter are visible and subject to destruction or confiscation. We believe there is now a greater use of and more demand for money to buy basic commodities and reduce the risks of transporting goods.

Overall Food Situation

Food supplies in Afghanistan last year probably were near the levels available before the Soviet invasion. We believe there were 2.8 to 3.3 million tons of wheat available from domestic production and imports to feed roughly 14 million people. Afghanistan was generally considered self-sufficient in wheat supplies in 1976, when wheat production reached 2.9 million tons and the population was roughly 14.5 million.

Our estimate of the range of food supplies in Afghanistan leads us to conclude that even at the lower end of the range there was sufficient food in the country to feed the population at prewar levels if distributed properly. If food supplies were at the upper range of the estimate, they would have exceeded minimum requirements by 400,000 tons.

25X1

Even when supplies are sufficient, however, problems in distribution and combat operations could still lead to spot shortages. 25X1

supplies probably were greater than 25X1 the minimum. For the past year we have had little reporting of severe food shortages. Extra food would compensate for the additional inefficiencies in the system, allow for private stockpiles and hoarding, especially in the rural areas, and the destruction of some food supplies from military operations and sabotage. 25X1

25X1

Outlook

Preliminary information indicates that food supplies in 1984 generally are still adequate, with the possible exception of Farah province. Crops produced thus far this year—primarily winter wheat—appeared to be of at least normal quantity. [redacted] sufficient water in rivers, canals, and reservoirs to satisfy the needs of the spring growing season. [redacted]

Afghanistan's food supplies, agriculture production, and food distribution networks, however, remain fragile. The advent of widespread combat operations or a Soviet effort to deny food supplies could easily upset the tenuous balance and could quickly lead to localized shortages. [redacted] in the Panjsher Valley, for example, the fighting from April to June left crops rotting in the fields. If large areas of crops go unharvested and unplanted, and the Soviets block the main entrances to the valley, the inhabitants are likely to face shortages this winter. The same would hold true in other areas of concentrated military activity. [redacted]

Adverse weather would lead to more widespread food shortages. [redacted] last winter's snowfall was below normal. Some areas of western and southwestern Afghanistan reportedly are experiencing drought. [redacted]

While the US Embassy in Kabul has indicated that it usually takes two years of light snowfall to cause serious problems, insufficient snowfall last winter probably will reduce the water available for summer crops and fall planting. [redacted] 25X1

[redacted] Spot 25X1 shortages attributed to bad weather are likely to be 25X1 felt first in the western provinces and the Hazarehjat—areas most inaccessible to supplies from Pakistan 25X1 or the northern provinces. We estimate, however, that it would be sometime next year before severe weather conditions cause widespread food supply problems. [redacted] 25X1

[redacted] 25X1
25X1
25X1

25X1

25X1

25X1

25X1

Page Denied

Next 1 Page(s) In Document Denied